CITY OF SAINT PETER

DEPARTMENT OF BUILDING SAFETY

Phone 507-934-0662 Fax 507-934-4917

NEW HOME PACKET CONTENTS

Page
2. Building Permit Requirements
5. When is a permit required and not required?
7. Requirements for Submitted Building Plans
9. Data Practices Advisory
10. Addressing Requirements
11. Sidewalk/Curb Letter
12. Backflow Letter
13. Building Permit Application
14. Plumbing/Mechanical Permit Application
15. Energy Code Worksheets
18. Public Works Checklist
20. Electric Service Request
21. Water & Sewer/Excavation Policies & Permit Applications
37. Miscellaneous Utility Information
47. CenterPoint Energy Information

CITY OF SAINT PETER DEPARTMENT OF BUILDING SAFETY
BUILDING PERMIT REQUIREMENTS

The following information must be submitted to the Building Department before a building permit can be processed and approved. Submit to the Municipal Building, Building Department Office @ 227 South Front Street. Phone 507-934-0662 Fax 507-934-4917

1. **A completed Building Permit Application Form**
2. **Two (2) copies of a Survey of a Site Plan**
3. **Two (2) sets of Construction Plans**
4. **Energy Code Compliance Forms (as required)**
5. **A completed Excavation Permit (if digging in the right-of-way or street)**
6. **A completed Plumbing/Mechanical Permit**
7. **Public Works Checklist**

1. BUILDING PERMIT APPLICATION FORM: Must be obtained from the Building Department. Provide State contractors license on the application

2. SURVEY OR SITE PLAN: Provide an updated site plan or survey (to scale) of your property showing all property lines, existing buildings and their dimensions, setbacks (distances) from property lines, wells, easements, streets, alleys and the proposed location of the new house. Please indicate height of house on the site plan (ie: (1) one story, (1 ½) one and one half story, (2) two story). A sample site plan is available from the Building Department.

3. CONSTRUCTION PLANS FOR SINGLE AND TWO FAMILY DWELLINGS: You must submit two sets of complete plans and specifications (drawn to scale) that contain the following information.

    a. Footing/Foundation plans showing:
        i. Material used for fill and footings, depth and width of footings, size and placement of reinforcement.
        ii. Material used for foundation, size of foundation, size and placement of reinforcement.
        iii. Type and location of foundation drainage system.
    b. Floor plan of basement and each floor above
    c. Front elevation, rear elevation, and both side elevations
    d. Cross section showing all floors and roof
    e. Details as needed to show compliance with the Building Code
    f. Electrical plan (if required)
    g. Plumbing plan (if required)
    h. Accessibility compliance (if required)
    i.

4. PLANS, SPECIFICATIONS, AND EITHER CALCULATIONS OR COMPLIANCE FORMS SHOWING COMPLIANCE WITH ALL REQUIREMENTS OF THE MINNESOTA ENERGY CODE INCLUDING:
    a. Exterior envelope component materials, U-values of doors, windows, and skylights
    b. R-values of insulation used in walls, ceiling/roof floors rim joists basement/foundation walls, etc

c. Location of interior air barrier, vapor retarder, and wind wash barrier
d. Air sealing requirements
e. Size and type of equipment (space heating, water heating, air conditioning, ventilating fans, and other ventilation equipment including input BTU's and CFM ratings)
f. Equipment controls
g. Any other data needed to indicate compliance with code

5. EXCAVATION PERMIT: An excavation permit is required before digging in the sidewalk, right-of-way, or street. An excavation permit application is available at the Building Department.

6. PLUMBING/MECHANICAL PERMIT: A separate plumbing/mechanical permit is required for any plumbing or mechanical work to be done (new, replacement, or remodel).

7. PUBLIC WORKS APPROVAL: A building permit will not be issued until Public Works has conducted their review of the plans in their areas of responsibility.

REQUIRED BUILDING INSPECTIONS: CALL 507-934-0662

1. **Site**: After the lot lines, setbacks, and elevations are marked and BEFORE any excavation work begins.
2. **Utility**: After the water and sewer service lines are connected, bedded, and tested, but before backfilling occurs.
3. **Footing**: After footing forms are in place, reinforcement is in place, and before pouring concrete.
4. **Poured Foundation**: (if applicable) After forms and reinforcement are in place, and before pouring concrete.
5. **Foundation**: After damp-proofing, after the installation of all exterior insulation and foundation drains are in place and before backfilling.
6. **Framing**: After rough-in electrical inspection, rough-in plumbing drains and vents, and rough-in heating inspections and the roof is weather resistant.
7. **Insulation**: After all insulation, wind wash barrier, and vapor retarders are in place and the roof is weather proof.
8. **Wallboard**: After all wallboard is fastened, but before any taping of butts and fasteners. (Note: This applies to structural and/or firewalls).
9. **Final**: When the building is completed, turf establishment, the final electrical inspection, the final plumbing and the final heating inspections are completed, but before occupancy. A Certificate of Occupancy will be issued when all inspections have been approved and the inspection record is returned to the Building Department.

REQUIRED PLUMBING INSPECTIONS: CALL 507-934-0662.

1. **Underground**: (if applicable) When all underground work is complete and air tested (5# for 15 min.) and before covering.
2. **Rough-In**: After all drain and vent pipe is installed and air tested (5# for 15 min.). After rough-in water pipe is installed and all pipe nail protectors have been installed.
3. **Final**: After all fixtures are set and the completed system passes the manometer test.

REQUIRED MECHANICAL/HEATING INSPECTIONS: CALL 507-934-0662.

1. **Underground**: (if applicable) When all underground duct work is installed, insulation is in place and before covering.
2. **Rough-In**: After all heating, cooling, ventilation lines, and ducts are installed, but before covering.
3. **Fuel Gas Piping**: After all gas piping has been installed an air tested (25# for 30 min.), but before covering.
4. **Final**: After all gas appliances are installed and the system passes a manometer test.

REQUIRED FIREPLACE INSPECTIONS: CALL 507-934-0662.

1. **Masonry Rough**: (if applicable) After the fire box, smoke chamber, and first section of flue are installed.
2. **Fireplace Rough**: After unit is installed, gas piping is into the appliance, flue, and vent terminations are installed.
3. **Fireplace Final**: After all hearths, facing materials, and vent terminations are complete.

REQUIRED ELECTRICAL INSPECTIONS: Note: Electrical wiring must be permitted and inspected by the State Electrical Inspector. See SCHEDULING INSPECTIONS below.

1. **Underground**: (if applicable) After all underground work is complete and before covering.
2. **Rough-In**: After all above grade wiring is complete, but before covering
3. **Final**: After all fixtures are installed and the completed system passes the required tests. (Final building inspection will not be complete and Certificate of Occupancy will not be issued until the final electrical inspection is completed).

BUILDING PERMITS WILL NOT BE ISSUED AND WORK CANNOT BEGIN UNTIL THE APPROPRIATE PERMITS HAVE BEEN APPROVED FOR ISSUANCE BY THE BUILDING OFFICIAL. Failure to provide all the information requested above will delay or prevent permit approval. After a preliminary review, additional information may be required. Please allow 7 days for a building permit to be processed. **REMEMBER TO CALL THE BUILDING DEPARTMENT AT 507-934-0662**.

GOPHER STATE ONE CALL: Before excavating, call Gopher State One Call at **1-800-252-1166** to have the location of all underground utilities marked. A **48-hour** advance notice is required. Along with the excavation address, Gopher State One Call will ask for the township, Range, and Section descriptions of your property. That information can be obtained from the Building Department.

SCHEDULING BUILDING OR PLUMBING / MECHANICAL INSPECTIONS: Call the Building Department at **507-934-0662** between 8:00 AM and 5:00 PM, Monday through Friday. To facilitate scheduling, we ask that requests for inspections be made in advance as far ahead as possible. Any requests made **before 12:00 PM will be scheduled that day** as available. Any requests made **after 12:00 PM will be scheduled the following day**. Please have the address, permit number, and type of inspection needed when making your request.

SCHEDULING ELECTRICAL INSPECTIONS: For electrical permits or inspections, call the State Electrical Inspector to schedule.

CITY OF SAINT PETER

DEPARTMENT OF BUILDING SAFETY

Phone 507-934-0662 Fax 507-934-4917

When is a permit required and not required?

TO ALL CONTRACTORS AND HOMEOWNERS DOING ANY WORK 0N STRUCTURES OR THEIR SYSTEMS IN SAINT PETER:

PERMITS REQUIRED:

> "An owner or authorized agent who intends to construct, enlarge, alter, repair, move, demolish, or change the occupancy of a building or structure; erect, install, enlarge, alter, repair, remove, convert, or replace any **gas, mechanical, electrical, plumbing system, or other equipment,** the installation of which is regulated by the code; or cause any such work to be done, shall first make application to the building official and obtain the required permit."

WORK EXEMPT FROM PERMIT: (Some of these items may require a zoning permit).

Exemptions from permit requirements of the code do not authorize work to be done in any manner in violation of the code or any other laws or ordinances of this jurisdiction.

A. Building Permits:

(1) One story detached accessory buildings on not more than 200 square feet.
(2) Fences not over six feet high.
(3) Oil derricks.
(4) Retaining walls not over four feet high from the bottom of the footing to the top of the wall.
(5) Water tanks of 5000 gal. or less with other stipulations.
(6) Sidewalks and driveways that are not part of an accessible route.
(7) Detached decks and platforms not more than 30 inches above grade, without frost footings, and which is not part of an accessible route.
(8) Painting, papering, tiling, carpeting, countertops, and similar finish work.
(9) Temporary theater stage sets and scenery.
(10) Prefabricated swimming pools accessory to dwelling units constructed to a specified height and width.
(11) Exterior window awnings of Group R-3 and Group U occupancies.
(12) Movable cases, counters, and partitions not over 7 feet tall.
(13) Agricultural buildings as defined in Minnesota Statutes, section 16B.60. Subdivision 5.

Unless otherwise exempted, plumbing, electrical, and mechanical permits are required for sub items (1) through (13).

B. Gas Permit:

(1) Portable heating, cooking, or clothes drying appliances.
(2) Replacement of any part that does not alter approval of equipment or make the equipment unsafe.

C. Mechanical:

(1) Portable heating appliances.
(2) Portable ventilation appliances and equipment.
(3) Portable cooling units.
(4) Steam, hot, or chilled water piping within any heating or cooling equipment regulated by this code.
(5) Replacement of any part that does not alter approval of equipment or make the equipment unsafe.
(6) Portable evaporative coolers
(7) Self – contained refrigeration systems containing 10 pounds or less of refrigerant or that are actuated by motors of 1 horse power or less.

D. Plumbing:

The clearing of stoppages, provided the work does not involve or require the replacement or rearrangement of valves, pipes or fixtures.

Locally we will allow the repair or replacement of toilets, sinks, and sink faucets provided that all parts and fixtures are code compliant and all work is done according to the Minnesota Plumbing Code.

E. Elec trical:

The City of Saint Peter does not issue electrical permits. Electrical permits are issued by the State Board of Electricity, through their local contract inspector. Obtaining a permit from the Board of Electricity does not exempt the work from other Minnesota State Building Code requirements relating to electrical equipment, its location, or its performance.

EMERGENCY REPAIRS:

If equipment replacements and repairs must be performed in an emergency situation, the permit application shall be submitted to the building official within the next working day.

REPAIRS:

Application or notice to the building official is not required for ordinary repairs to structures. The repairs shall not include the cutting away of any wall, partition, or portion of a wall or partition, the removal or cutting of any structural beam or load bearing support, or the removal or change of any required means of egress, or rearrangement of parts of a structure affecting the exit requirements; nor shall ordinary repairs include addition to, alteration of, replacement, or relocation of any standpipe, water supply, sewer, drainage, drain leader, gas, soil, waste, or similar piping, electrical wiring, or mechanical or, other work affecting public health, or general safety.

Either the contractor or a homeowner may apply for and receive the necessary permits, but the **person that is doing the work is responsible to verify that the necessary permit is on the job site before any work begins** and to call for the appropriate inspections. Emergency repairs are the only exception.

NOTE: A homeowner may do work on his/her own residence but obtaining the proper permits and inspections are required.

Requirements for Submitted Building Plans - Single-Family Homes

Applicants for Building Permits in are required to provide two complete sets of project construction plans and a site plan for approval. The Building Inspection Department will review construction plans. The jurisdiction will retain one set of construction plans; one set of approved construction plans will be returned to the applicant to be kept on-site for inspections.

Site Plans

An acceptable Site Plan will show the outline of the parcel, and indicate northern direction with dimensions and include the items listed below.

Dimensions - Indicate all building dimensions.

Address - Indicate address or lot, block and subdivision

Set-Backs - Show all of the building set-back distances. Include the front, side, and rear distances from property lines or from highway right-of-way, from center line of roads, and from shorelines.

Private Drives - Show the location of private drives and alleys.

Accessory Buildings - Show the location of existing or proposed accessory buildings.

Construction Plans

Home Construction Plans should include the items listed below.
Minimum Scale: ¼" = 1'.
Most items can be shown on a typical section sheet.

Elevations - Indicate front, rear, and side elevations.

Floor Plans - Include floor plans of the garage, the basement, and each level of construction. Floor plans should include all dimensions, room descriptions, location of all plumbing fixtures, and location of the mechanical area and the placement of mechanical units, locations of all doors and the door swings, and any applicable notes.

Smoke Detectors - Show placement of smoke detectors.

Windows - Include the manufacturer, identification number, rough openings, header size, style or type of window (double hung, casement, awning, sliding…).

Energy Loss - Calculate and evaluate energy loss.

Foundations - Include block size or poured concrete size, reinforcement placement, size and spacing, and finished height above the footing. If it is a wood foundation, submit the name of the manufacturer and all construction details.

Footings - Include the depth and the width of the footings, the size and placement of bearing pads, and the size and placement of reinforcements. For wood footings and foundations, submit a cross section of rock depth, size, and other construction details.

Conventional Roof - Indicate the size and the spacing of all framing members, the size and the type of sheathing, shingle type and weight, and underpayment material.

Truss Roof - Trusses must be designed by a registered engineer of the State of Minnesota or manufactured by a certified manufacturer of trusses approved by the State of Minnesota.

Studs - For all interior and exterior walls, indicate the stud size and spacing.

Joists / **Beams** / **Posts -** Include size and type of all headers, micro lam and laminated veneer lumber (LVL). For steel beams include the beam size designation number (i.e.: W10x29). For I-joists include the size, the spacing, the manufacturer, and additional pertinent details.

Exterior Sheathing - Indicate the size and the type of all exterior sheathing.

Exterior Siding - Indicate the size and the type of all exterior siding.

Exterior Wall Insulation - Indicate the size and the type of all exterior wall insulation.

Vapor Barrier - Indicate the type of vapor barrier to be used in the walls and ceiling.

Interior Walls / **Ceilings -** Indicate the size and the type of interior wall and ceiling coverings.

Ceiling Insulation - Indicate the type and the thickness of ceiling insulation.

Stairways - Include the maximum riser height, the minimum tread measurement, the vertical head room, handrail, guardrail height, and baluster spacing.

Fire Protection - Submit details of the fire protection between living quarters and attached garage.

Fireplace / **Wood Burners -** Include chimney type and size, construction details, and other pertinent information.

BUILDING PERMIT
DATA PRACTICES ADVISORY

You are required to submit building plans with your permit application so that the City can determine if a building permit should be issued. If you do not submit building plans when they are required, you will not obtain the permit. If you think that those plans have economic value from not being generally available and you wish to maintain their secrecy, please check the box below that is designated “trade secret information” and explain your reasons. If you think that those plans have information that would jeopardize the security of the property if the information were released, please check the box below that is designated “security information” and explain your reasons. Trade secret information and security information are not available to the public. Building plans that contain trade secret information or security information will not be given to the public and will be provided only to government officials who have a need to review them. Other building plans are available to anyone.

* * * * * * * * * * * *

To be completed by the applicant:

□ The building plans have “trade secret information”. Please explain:

□ The building plans have “security information”. Please explain:

□ The building plans do not have “trade secret information” or “security information”.

Date: _____ _____

Signature of Permit Applicant

CITY OF SAINT PETER ADDRESS NUMBERS
RE: MINNESOTA STATE FIRE CODE

1. ALL PRINCIPLE BUILDINGS MUST BE NUMBERED.
2. NUMBERS MUST BE OF A COLOR CONTRASTING THE BACKGROUND.
3. NUMBERS MUST BE CLEARLY VISIBLE FROM THE STREET

   (MINIMUM OF 4 INCHES RECOMMENDED).
4. NUMBERS MUST BE ON THE FRONT (OR SIDE) OF THE BUILDING THAT

   FACES THE ADDRESS STREET.
5. NUMBERS MUST BE ON THE BUILDING ITSELF

   (Numbers on light posts, etc., are allowed, but only in addition to the number on the

   building).
6. NUMBERS MUST NOT BE HIDDEN FROM THE STREET BY SHRUBBERY OR

   OTHER OBJECTS.

To: Permitee

From: Dean Busse, Building Official
Russ Wille, Director of Community Development

Re: Damaged Sidewalks and Curbs during construction

Concerns have been raised that during construction several of the city sidewalks and curbs could be damaged. In order to eliminate damage to the sidewalks and curbs during construction, curb cuts should be done prior to construction in order to provide for easy access to the lot. If the permitee is unable to provide a curb cut prior to construction, a portion of the curb should be identified by spray paint/stakes, indicating the area that heavy equipment can enter and exit the lot.

Please note that it will be the responsibility of the permitee to replace any sidewalk and/or curb that is damaged during construction. Damage cannot be repaired. Replacement of the damaged sections (from construction cut or score line to construction cut or score line) will be required as per city standards.

If you should have any questions, please contact the building department at 1-507-934-0662.

January 1, 2010

Residents of Saint Peter:

The State of Minnesota requires that the public drinking water supply be protected from cross-connection. Each home owner is responsible for providing this protection. This can be accomplished by providing an air gap between a water supply (faucets) and drain or sinks/tubs, or by installing a vacuum breaker or a backflow preventor at the point of use. All threaded faucets where a hose can be attached, inside or outside, the home needs to be fitted with a vacuum breaker to prevent possible back flow to the water supply.

The Building Department will be requiring backflow prevention in all existing homes and new construction when a permit is issued.

The vacuum breaker for a hose connection and the proper hose bibs can be purchased at a local hardware store or at a plumbing supply store.

If you have any questions, Please feel free to contact the City Building Department at City Hall 1-507-934-0662.

Thank you for your time.

Dean Busse
Building Official
Building Department

DB/ll

The City of Saint Peter is an equal opportunity provider.
TDD #711

City of Saint Peter

Building Department
227 South Front
Saint Peter, MN 56082
Phone: 507-934-0662 Fax: 507-934-4917

Permit Number_____

BUILDING PERMIT APPLICATION

BUILDING SITE ADDRESS (OR) LOT BLOCK PHONE

PROPERTY OWNER ADDRESS PHONE

GENERAL CONTRACTOR LICENSE# / EXP Date ADDRESS PHONE

PLUMBING CONTRACTOR (IF APPLICABLE) LICENSE# / EXP Date ADDRESS PHONE

MECHANICAL CONTRACTOR (IF APPLICABLE) ADDRESS PHONE

ELECTRICAL CONTRACTOR (IF APPLICABLE) LICENSE# / EXP Date ADDRESS PHONE

EXCAVATION CONTRACTOR (IF APPLICABLE) LICENSE# / EXP Date ADDRESS PHONE

PROPERTY USE
- ❑ SING LE FAMILY RES.
- ❑ TWO FAMILY RES.
- ❑ THREE + FAMILY RES.
- ❑ COMMER CIAL
- ❑ INDUST RIAL
- ❑ INSTITU TIONAL
- ❑ PUBLIC

TYPE OF WORK
- ❑ NEW BUILDING
- ❑ EXISTING BUILDING
  - ❑ ADDITI ON
  - ❑ REMODEL
  - ❑ REPAIR
  - ❑ DECK
  - ❑ REROOF
  - ❑ RESIDE

TYPE OF STRUCTURE
- ❑ PRINCIPLE BUILDING
- ❑ GA RAGE
- ❑ ACCESSO RY BUILDING
- ❑ TEMPORA RY BUILDING
- ❑ O THER (SPECIFY)

_____

_____

Occupancy _____
Type of Construction _____

PROPOSED SETBACKS
FRONT_____ NSEW
LEFT_____ NSEW
RIGHT_____ NSEW
REAR_____ NSEW

DESCRIPTION OF PROJECT _____

_____

CONSTRUCTION & SITE PLANS ATTACHED (TWO COPIES EACH) ☐ YES ☐ NO ☐ SQUARE FOOTAGE_____

IS AN EXCAVATION PERMIT REQUIRED? ☐ YES ☐ NO IS THE HOME OLDER THAN 1978? ☐ YES ☐ NO

IF SO PROVIDE LEAD CERTIFICATION LICENSE # _____ SIGN (LICENSEE) _____

ESTIMATED VALUE OF WORK (INCLUDING LABOR) $_____

DOES THIS VALUE INCLUDE P&H ☐ YES ☐ NO

Permit becomes void if work does not begin within 180 days or if suspended at any time for over 180 days. Permits issued and inspections made by the City are a public service and do not constitute any representation, guarantee or warranty, either implied or expressed, to any person as to the condition of the building or conformance to applicable construction codes. The undersigned acknowledges that this application has been read and that the above is correct and agrees to comply with all the ordinances and laws of the City of Saint Peter regulating building construction.

EMAIL ADDRESS _____

BUILDING PERMIT FEE_____
PLAN REVIEW FEE_____
STATE SURCHARGE_____
TOTAL BUILDING FEE_____
PUBLIC WORKS FEE_____
TOTAL PERMIT FEE_____
RECEIPT NUMBER_____
ISSUED BY_____
PW APPROVAL_____

SIGNATURE OF: ☐ **OWNER** ☐ **CONTRACTOR** ☐ **AUTHORIZED AGENT** **PRINTED NAME** **DATE**

BUILDING OFFICIAL APPROVAL DATE ZONING ADMINSTRATOR APPROVAL DATE

City of Saint Peter

Building Department
227 South Front
Saint Peter, MN 56082
Phone: 507- 934- 0662 Fax: 507- 934- 4917

Permit Number_____

- ❑ PLUMBIMG PERMIT
- ❑ MECHANICAL PERMIT
- ❑ BOTH
- ❑ FIRE SPRINKLERS
- ❑ LAWN SPRINKLERS

PLUMBING-MECHANICAL PERMIT APPLICATION

BUILDING SITE ADDRESS (OR) LOT BLOCK PHONE

PROPERTY OWNER ADDRESS PHONE

PLUMBING CONTRACTOR (IF APPLICABLE) LICENSE# / EXP Date ADDRESS PHONE

MECHANICAL CONTRACTOR (IF APPLICABLE) ADDRESS PHONE

ELECTRICAL CONTRACTOR (IF APPLICABLE) LICENSE# / EXP Date ADDRESS PHONE

ARCHITECT/ENGINEER LICENSE# / EXP Date ADDRESS PHONE

CLASS OF WORK	BUILDING USE	TYPE OF WORK	TYPE OF STRUCTURE
❑ NEW	❑ SING LE FAMILY RES.	❑ NEW BUILDING	❑ PRINCIPLE BUILDING
❑ ADDITI ON	❑ TWO FAMILY RES.	❑ EXISTING BUILDING	❑ GA RAGE
❑ ALTERATI ON	❑ THREE + FAMILY RES.	❑ ADDITION	❑ ACCESSO RY BUILDING
❑ REPLACE WATER HEATER	❑ COMMER CIAL	❑ REMODEL	❑ TEMPORA RY BUILDING
❑ REPLACE FURNACE	❑ INDUST RIAL	❑ REPAIR	❑ OTHE R_____
❑ HVAC	❑ INSTITU TIONAL		
❑ OTHE R _____	❑ PUBLIC		

PLUMBING SECTION: SPECIFY NUMBER OF FIXTURES_____ IS A PLUMBING PLAN ATTACHED? ☐ YES ☐ NO

DESCRIPTION OF WORK_____

DOES YOUR PLUMBING PLAN INCLUDE A FIRE SPRINKLER ☐ YES ☐ NO LAWN SPRINKLER ☐ YES ☐ NO

MECHANICAL SECTION:

HEATING UNIT (☐ Gas) (☐ Other_____) (Efficency _____%) (Size_____BTU)

(☐ Sealed Combustion) (☐ Direct or Power Vented) (☐ Atmospherically Vented) (☐ Other_____)

WATER HEATER (☐ Electric) (☐ Gas) (☐ Sealed Combustion) (☐ Direct or Power Vented) (☐ Atmospherically Vented)

COOLING UNIT (Size_____) (Seer_____)

ENERGY / VENTILATION SECTION:

MINNESOTA ENERGY CODE COMPLIANCE METHOD: ☐ CHAPTER 1322 Residential (Attach appropriate worksheet)
☐ CHAPTER 1323 Commercial (Attach appropriate worksheet)

SIGNATURE OF: ☐ OWNER ☐ CONTRACTOR ☐ AUTHORIZED AGENT **PRINTED NAME** DATE

ESTIMATED VALUE OF WORK (INCLUDING LABOR) IS THIS VALUE INCLUDED IN BUILDING PERMIT? ☐ YES ☐ NO

I certify that th e information contained herein is correct and agre e to do the pro posed w ork in accordance with the o rdinances and cod es of the City of S aint Peter regul ating building construction. If the person mak ing this application is not the property o wner, the applicant represents that the owner has authorized such work and the submittal of the application. Approved plumbing/mechanical permits are i ssued to the applicant. The per mit holder is responsible for all required inspections and corrections to completion.

BUILDING OFFICIAL APPROVAL **DATE**

PLUM/MECH PERMIT FEE _____
PLAN REVIEW FEE _____
STATE SURCHARGE _____
TOTAL PERMIT FEE _____
RECEIPT #_____
ISSUED BY_____

New Construction Energy Code Compliance Certificate

Per N1101.8 Building Certificate. A building certificate shall be posted in a permanently visible location inside the building. The certificate shall be completed by the builder and shall list information and values of components listed in Table N1101.8.

Date Certificate Posted	
Mailing Address of the Dwelling or Dwelling Unit	**City**
Name of Residential Contractor	**MN License Number**

THERMAL ENVELOPE

Insulation Location	Total R-Value of all Types of Insulation	Type: Check All That Apply								Other Please Describe Here
		Non or Not Applicable	Fiberglass, Blown	Fiberglass, Batts	Foam, Closed Cell	Foam Open Cell	Mineral Fiberboard	Rigid, Extruded Polystyrene	Rigid, Isocynurate	
Below Entire Slab										
Foundation Wall										Type in location: interior exterior or integral
Perimeter of Slab on Grade										
Rim Joist (Foundation)										Type in location: interior exterior or integral
Rim Joist (1st Floor+)										Type in location: interior exterior or integral
Wall										
Ceiling, flat										
Ceiling, vaulted										
Bay Windows or cantilevered areas										
Bonus room over garage										
Describe other insulated areas										

RADON SYSTEM

	Passive (*No Fan*)
	Active (*With fan and monometer or other system monitoring device*)

Windows & Doors	
Average U-Factor (*excludes skylights and one door*) U:	
Solar Heat Gain Coefficient (SHGC):	

Heating or Cooling Ducts Outside Conditioned Spaces	
	Not applicable, all ducts located in conditioned space
	R-value

MECHANICAL SYSTEMS

Appliances	Heating System		Domestic Water Heater		Cooling System	
Fuel Type						
Manufacturer						
Model						
Rating or Size	Input in BTUS:		Capacity in Gallons:		Output in Tons:	
Structure's Calculated	Heat Loss:				Heat Gain:	
Efficiency	AFUE or HSPF%				SEER:	
					Calculated cooling load:	

Make-up Air *Select a Type*

	Not required per mech. code
	Passive
	Powered
	Interlocked with exhaust device. Describe:
	Other, describe:
Location of duct or system:	
	Cfm's
	" round duct OR
	" metal duct

Mechanical Ventilation System

Describe any additional or combined heating or cooling systems if installed: (e.g. two furnaces or air source heat pump with gas back-up furnace):

Select Type

	Heat Recover Ventilator (HRV) Capacity in cfms:	Low:		High:	
	Energy Recover Ventilator (ERV) Capacity in cfms:	Low:		High:	
	Continuous exhausting fan(s) rated capacity in cfms:				
	Location of fan(s), describe:				
	Capacity continuous ventilation rate in cfms:				
	Total ventilation (intermittent + continuous) rate in cfms:				

Combustion Air ***Select a Type***

	Not required per mech. code
	Passive
	Other, describe:
Location of duct or system:	
	Cfm's
	" round duct OR
	" metal duct

CITY OF SAINT PETER ENERGY CODE WORKSHEET

(To be used with MNCheck Computer Program)

BUILDING ADDRESS:_____**DATE**:_____

CONTRACTOR/OWNER:_____

1. **GROSS CEILING AREA:** Raised Heel (Energy Truss) = _____Square Feet "R"-Value_____

   Standard Truss – Flat ceiling or scissors truss = _____Square Feet "R"-Value_____

   Cathedral Ceiling = _____Square Feet "R"-Value_____

2. **GROSS WALL AREA:** (1st Floor) _____Lineal Feet x _____Height = _____ Square Feet. "R"-Value_____

3. **GROSS WALL AREA:** (2nd Floor) _____Lineal Feet x _____Height = _____ Square Feet. "R"-Value_____

4. **GROSS RIM JOIST AREA:** _____Lineal Feet x _____Height = _____ Square Feet. "R"-Value_____

5. **GROSS KNEEWALL AREA:** _____Lineal Feet x _____Height = _____ Square Feet. "R"-Value_____

6. **GROSS BASEMENT WALL AREA:** _____Lineal Feet x _____Height = _____Square Feet "R"-Value_____

7. **GROSS CRAWL SPACE FOUNDATION AREA:** _____Lin. Ft. x _____Hgt.= _____Sq. Ft. "R"-Value_____
   (From top of footing to top of wall)

8. **FLOOR OVER UNCONDITIONED SPACE AREA:** =_____Square Feet "R"-Value_____
   (Areas over garages, crawl space, unconditioned basement, etc.)

9. **FLOOR OVER OUTSIDE AIR:** =_____Square Feet "R"-Value_____

10. **PERIMETER OF HEATED SLAB ON GRADE:** (If applicable) =_____Lineal Feet "R"-Value_____

11. **HOUSE WINDOW AREA:** (Of same "U" Value) =_____Square Feet "U"-Value_____

12. **HOUSE WINDOW AREA:** (Of same "U" Value) =_____Square Feet "U"-Value_____

13. **HOUSE WINDOW AREA:** (Of same "U" Value) =_____Square Feet "U"-Value_____

14. **FOUNDATION/BASEMENT WINDOW AREA** (Maximum "U" Value of 0.51) =_____Square Feet "U"-Value_____

15. **PATIO DOOR AREA:** =_____Square Feet "U"-Value_____

16. **ENTRY DOOR AREA:** (Less than 50% Glass) =_____Square Feet "U"-Value_____

17. **ENTRY DOOR AREA:** (More than 50% Glass) =_____Square Feet "U"-Value_____

18. **SKYLIGHT WINDOW AREA:** (Maximum "U" Value of 0.55)_____Square Feet "U"-Value_____

19. **FURNACE AFUE:** (Efficiency rating) Rating_____

20. **AIR CONDITIONER SEER RATING:** SEER_____

COMMENTS: _____

_____

_____ 5-04

Get a copy of MNcheck for yourself – **www.state.mn.us/ebranch/admin/buildingcodes** (click on Links) (click on REScheck) (click on download REScheck software) (click on download REScheck for windows) Register software, then follow directions.

INFORMATION NEEDED FOR MECHANICAL & ENERGY CODE:

Sq. ft. (including basement):

Average height of ceiling:

No. of bedrooms (including future):

Ventilation type (balanced or exhaust):

HRV (yes or no) ERV (yes or no)

Defrost deduction: % CFM (low) CFM (high)

No. of water heaters: How vented? Input BTU's

No. of Furnaces: How vented? Input BTU's

Gas fireplace? Yes or no Type: Input BTU's

Solid fuel fireplace: (yes or no)

Largest other exhaust fan (cfm):

List other exhaust fans & CFM for each:

Combustion space: width: length: height:

PUBLIC WORKS CHECKLIST

Information Required for Building Permit Application

Building Department 934-0662 Department of Public Works 934-0670

Address: _____

- □ If 1.0 or more acres are disturbed a full Construction SWPPP designed for a person having adequate training and meeting the minimum requirements of the MN General Construction Stormwater Permit is provided. No work may begin until a copy of the active MPCA NPDES permit is provided.
- □ Is a Stormwater Management Plan required for this site?
  - □ The final site design complies with the approved Stormwater Management Plan, or

□ Map showing how building will be located on the lot.
Also include on the map:

- □ Exterior stormwater drainage plan identified.
  - □ Directional arrows are shown for proposed drainage.
  - □ Drainage easements are identified.
  - □ 1-foot contours both existing and proposed.
  - □ Location of all existing and proposed permanent stormwater control measures.
  - □ Location of all temporary sediment basins.
  - □ Existing and proposed impervious areas.
  - □ Buffer areas and areas not to be disturbed clearly marked.
  - □ All wetlands, drainage channels, surface waters, etc. located within 1.0 miles shown.
- □ Is on-site fueling proposed?
  - □ Location
  - □ Type of tank meeting Fire Marshal approval?
  - □ Secondary containment
- □ Description and location of erosion and sediment control (sediment control, inlet protection, etc.) devices. (Standard Detail Plate #3003, #3004 or approved alternative)
- □ Location of temporary stockpiles identified.
- □ Description, quantity, and location of erosion and sediment control devices. (Standard Detail Plate #3003, #3004 or approved alternative)
- □ Description of construction phasing.
- □ Location of access to lot identified.
  - □ If an access to the lot is being requested a rock exit (Standard Detail Plate #3005) will need to be installed.
- □ Location of concrete washout identified.
- □ Location of porta potty identified and located on private property
- □ Location of construction dumpsters identified and located on private property
- □ Location of curb cut for driveway identified. Need Curb & Gutter/Driveway application.
  - □ Existing or □ Proposed size of curb cut desired _____ (Standard Detail Plate #7020)
- □ Location of curb stop identified. If curb stop is in the driveway or a sidewalk an A-32 Ford water cover is required. (Standard Detail Plate #6002)
- □ Location of water service and curb stop identified. (Standard Detail #6002, #6003)
- □ Location of wastewater service and clean out identified. If the clean out is in the driveway or a sidewalk an A-32 Ford water cover is required. (Standard Detail #5004)
- □ Location of electric service identified. (Identify from beginning to termination point)
  - □ Service to be open cut □ Service to be directional bored
- □ Location of a mailbox that contains the weekly site inspections (Mailbox needs rain gauge).

□ Mechanical room floor plan including the following information:
  □ Utility room location
  □ Water meters location in the utility room
  □ Sump pump and tile location and outside rigid pipe discharge location
  □ Electric panel location (interior)
  □ Desired electric meter location (exterior) (Standard Detail #2013)

□ Size of copper water service:
  □ 1 inch □ 1 ½ inch □ 2 inch □ other _____
  □ Amount of 1" Type K copper requested _____

□ Size of PVC wastewater service:
  □ 4 inch □ 6 inch □ other _____

□ Electric service: Fill out City of Saint Peter Electric Utility Service Request

□ Excavation proposed in Right-Of-Way □ Yes □ No

- Please inform excavators that additional fees will be required in the right-of-way if not paid when the building permit is taken out.

(IF THIS INFORMATION IS NOT PROVIDED THE PERMIT APPLICATION WILL BE CONSIDERED INCOMPLETED AND WILL BE RETURNED)

Signature: _____ Name: _____
Contractor or Owner (Please Print)

Reviewed by: _____ Name: _____
Signature (Please Print)

City of Saint Peter Electric Utility Service Request

All information below will need to be filled in to receive a secondary service.

Temporary service required Yes --No Approximate Date to connect ____/____/____
Circle One

Size & Voltage ofTemporary service _____AMPS_____/_____VOLTAGE

Proposed Location (Site Map Required)

Temporary service is the cost of the Contractor/Owner,

A copy of the Contractor Request for Electrical Inspection will be supplied by the Electrical Contractor before any Temporary Service or Permanent Service will be connected.

Panel service size in building _____AMPS

Service Voltage requesting _____/_____VOLTAGE

Service phases Single phase --- Three phase
Circle One

Who will be installing the secondary service?
_____

Approximate date when permanent service will be needed ____/____/____

Proposed Electric Utility's secondary connection point (Site Map Required)

The final location of secondary electrical connection points will be made by the Electric Utility.

STORMWATER UTILITY

Building Department 934-0662 or Public Works 934-0670

ATTENTION BUILDER:

AS PART OF YOUR BUILDING PERMIT REQUIREMENTS YOU ARE RESPONSIBLE FOR EROSION CONTROL OF THIS PROPERTY.

AT A MINIMUM, YOU MUST HAVE:

1. **SEDIMENT CONTROL DEVICES PROPERLY INSTALLED & MAINTAINED.**
2. **CONSTRUCTION EXIT ADEQUATELY SIZED AND DESIGNED TO KEEP TRACKING OFF PAVED STREETS**.
3. **PROTECTION AT CATCH BASINS & PIPE INLETS OF A TYPE APPROVED BY THE CITY**.
4. **PREVENT EROSION AND CONTROL SEDIMENT**.
5. **INTERIM SEED & MULCH ON <u>ALL</u> EXPOSED SOILS WITHIN 7 DAYS OF ACTIVE SOIL DISTURBANCE ENDING.**
6. **STREET SWEEPING COMPLETED AT THE END OF EACH BUSINESS DAY.**

Building inspectors will not perform inspections or issue the certificate of occupancy if erosion controls are not in compliance with City requirements. Any costs incurred by the City in excess of the property's security shall be assessed to the property.

The Stormwater Utility will periodically check the property for erosion control compliance. Properties that are out of compliance are subject to the City's Enforcement Response Procedures (ERP). The ERP is available on the City's website at www.saintpetermn.gov/stormwater. Paper copies may be obtained by contacting the City of Saint Peter Public Works Department.

3/11/2015

Dear Building Permit Holder,

The City of Saint Peter is subject to State and Federal laws prohibiting discharge from your property into our storm drains and waterways of anything except clean rainwater. As a requirement of these laws, the City enforces construction regulations concerning Best Management Practices (BMPs). The City conducts inspections of building construction sites to assure these quality control measures are in place. Your building site will be subject to these inspections.

During an inspection, City staff will evaluate the permitted site to identify conditions that may result in discharges of pollutants to stormwater. All types of potential contaminants from jobsites including sediment, oil vehicle fluids, concrete washout, paint, landscaping materials, fertilizers, pesticides, and trash are prohibited. If the site is larger than one acre or less than one acre and the activity is part of a "larger common plan of development or sale" that is greater that one acre requires a General Stormwater Permit through the Minnesota Pollution Control Agency.

Following are some of the items that inspectors will review:

- Control of sediment or muddy water running off from the site.
- Potential of contaminated runoff in the event of rainfall (e.g. vehicle fuel or fluid leaks, material spills, paint waste, unprotected stockpiles, etc.)
- Stabilized construction access is installed and maintained and there is no mud, debris, or trash on the adjacent roads.
- Erosion controls (temporary seeding, undisturbed land, mulching) and perimeter controls (silt fence, socks, wood chips) are property installed and maintained.
- Construction material is properly store (covered when not in use, out of the right-of-way, secondary containment if needed).
- Dust control measures are being effectively applied.
- Concrete washout area is labeled, supplied and maintained to subcontractors.
- Dumpsters are covered, cleaned-up and emptied regularly to keep the site trash free.
- Portable toilets are out of the street and the right-of-way so liquid can't enter the storm drain system if they are knocked over.
- All operator storm drain inlets are effectively protected from sediment inflow.

If the inspector identifies an actual or potential discharge of any pollutant, the jobsite operator and/or owner will be asked to correct the situation. If you have any questions related to inspections, please call the Stormwater Utility at (507) 934-0670.

SAINT PETER DEPARTMENT OF BUILDING SAFETY

WATER AND SEWER SERVICE LINE POLICIES
FOR NEW CONSTRUCTION AND REPAIRS

PERMITS REQUIRED: Before commencing work to install or repair any water or sewer service line, a plumbing permit must be obtained from the Building Department. If work involves digging in the public right-of-way (R.O.W.), a Land Disturbing Permit must also be obtained from the Building Department. For emergency repairs, the permits must be obtained during the next business day.

Several Public Works staff members have been authorized by the Building Official to conduct the necessary inspections of this work when K copper water lines and PVC or ABS sewer lines are installed. See accompanying Public Works Water and Sewer Service Policy for details. If any other materials approved by the Minnesota Plumbing Code are intended to be installed, notice must be given to the Building Department prior to commencement of installation so that alternate inspections procedures can be undertaken.

Any materials installed in the R.O.W. must be approved by the Department of Public Works. Any materials installed in the property and not in the R.O.W. must be approved by the Minnesota Plumbing Code.

2015 WATER AND SEWER SERVICE POLICY
and
NEW HOME CONSTRUCTION

DEPARTMENT OF PUBLIC WORKS
Water Resources
405 W. Saint Julien Street
(507) 934-0670 – telephone

Amy Kamm – Stormwater Foreman
Chris Voeltz - Water Foreman Scot Peterson - Wastewater Foreman

POLICY REQUIREMENTS – The Saint Peter Utilities Division has identified several key issues that can assist you with installation, inspection and energizing your water and sewer services. Saint Peter Utility Standard Details and Minnesota Plumbing Code requirements apply for all installations of water and sewer services.

BEFORE YOU DIG: The contractor is responsible to contact Gopher State One Call and to obtain a Land Disturbing permit prior to begin of any work.

INSPECTION REQUIREMENTS: Utility staff completes inspections of all new and repaired utility service lines (water, sewer, or stormwater) before any utility can be covered. To assure timely service, the contractor should make contact with the *Stormwater Foreman* at least **<u>four</u> (4) business hours** in advance of the need for an inspection. Call Public Works and ask to schedule an inspection with the Stormwater Foreman and our staff will put you in contact with the right person. If you do not speak directly with the Stormwater Foreman you may leave a message on voicemail but that does not assure that the message has been received. Service inspections will be performed free of charge if the contractor or plumber has made the proper arrangements for an inspection during normal working hours which are 7:00 am to 4:00 pm Monday – Thursday and 7:00 a.m. to 11 a.m. on Friday. Overtime rates will apply if an inspection is required after normal working hours and/or proper notification has not been completed.

Please note that Utility Staff cannot permit a water service remain energized if the inspection requirements have not been met. Please check with the inspector to verify the status before asking that the water service be energized.

WATER SERVICE: (Standard Detail 6002 & 6003) Public Works Staff will complete a visual inspection of the water service line from the City owned main in the street to the final location of the water meter inside the building. It is the responsibility of the plumber/owner to call Public Works and arrange for an inspection so staff may view the entire line prior to covering or bedding the service line. The excavation must be completed so it is safe to enter the trench to complete the inspection.

- The Water Utility supplies the 1" Type – K copper for the service line to a single family residential home. Please make arrangements with the Water Foreman for pick up of copper from the Broadway Water Treatment Plant.
- Compression fittings will be allowed when connecting to the water service in the right-of-way (ROW) but are not permitted underground on private property or in easements.
- Silver soldered joints are acceptable as per state code.
- Flare fittings are allowed as per state code. The installation of a flare on the copper is a concern of the utility due to the hammering affect against a sealed joint.
    - A contractor who desires to use flare couplings can either use a ratchet flaring tool to install the flare or may use a flaring tool and hammer after which it is required that all known joints be exposed for a visual inspection.

Tips for Flaring Copper with a Ratchet Tool - An incorrect flare is one of the most common sources of leaks. To help prevent leaks and call backs, cut the tubing with a sharp cutting wheel for a clean right-angle cut. Use a rounding device to straighten the copper and to avoid tube constriction, use a light hand on the feed screw. Since unremoved burrs can break off into the tubing or scratch the flared surface, remove burrs with a debarring tool. A flare tool with burnishing cone puts a high polish on the flare and rolls out a perfect 45° flare. Over or under flaring prevents a good seal. If needed, use a drop of oil on the feed screw for precise action.

SEWER SERVICE: (Standard Details 5004, 5005 and 5017) Public Works Staff will complete inspections on the sewer service line from the City owned main in the street to 10' past the exterior cleanout. The sewer service pipe needs to be installed on compacted soil and Utility inspectors will be looking for a compacted trench; the plumber/owner needs to assure that proper compaction has been completed before installing the pipe. The sewer service shall be installed at a minimum cover depth of six feet (6'). Any portion of the sewer with a cover depth of less than six feet (6') shall be insulated with a minimum of two inch (2") waterproof foam board insulation.

- It is the responsibility of the licensed plumber or owner to call Public Works and arrange for an inspection so staff may view the entire line prior to covering or bedding the service line.
- The exterior cleanout needs to be installed as per Standard Detail 5004. An exterior cleanout on a service line allows Utility Staff to televise your private service at no additional cost to the homeowner should they experience trouble with the sewer service. If an exterior cleanout is not installed the sewer service will not be televised free of charge.
    - Before the water service is energized Utility inspectors will examine the exterior clean-out to assure it is properly capped as per Standard Detail 5004.

REQUEST FOR SERVICE: During a normal workday, requests to turn on or turn off water services received in the morning (A.M.) will be completed in the afternoon of the same day, providing that the service line is accessible and operable. Requests received after 12:00 (noon) will be completed before noon the following business day.

MATERIALS SUPPLIED BY THE UTILITY: The Water Utility supplies the 1" Type – K Copper for the service line and a dual meter horn assembly for each new single family residential service. Materials supplied by the Utility can be picked up at the Public Works office by calling the Water Foreman and scheduling a time to pick up the materials. Materials will not be delivered to the job site or left at an empty house.

ENERGIZING A WATER SERVICE: Utility Staff will energize a new or existing water service after the water and sewer services have been inspected and approved for use by Utility staff. Utility staff will also pick up the remaining unused copper at this time. If the unused copper is not returned at this time then the water line will not be energized. After meeting inspection requirements the owner or licensed plumber can schedule an appointment to complete the meter installations. An appointment can be scheduled by contacting the Public Works Office and asking for the Water Foreman. The plumber/owner needs to provide the address where the work is to be performed and must identify the scope of work planned. Prior to staff arrival, the plumber shall install a dual meter horn assembly for each new residential water service installation. The Water Utility will install the meters, energize the service, and complete a visual inspection.

When making an appointment to energize a service please note Utility Staff cannot energize a vacant property, the plumber/contractor/owner needs to be present when the service is energized so timing for both parties is critical. Also, please note that anyone besides Utility Staff member are prohibited from operating the City-owned curb stop *(Saint Peter City Code Ordinance 3.04 Subd. 7. Unlawful Acts. Section C.).*

WATER METER LOCATION: In order to prevent damage to the water service line the Saint Peter Utility suggest that all residential water meters shall be rigidly supported and located in the utility/laundry area or as approved during the building permit process. The meter should be adjacent to a floor drain, 12" to 24" above the floor, and 12" away from the wall. Please remember that at all times the water meter must be accessible for reading and for Staff to perform maintenance. Commercial or business meter locations need to be submitted for approval at the time of the building permit application. This assures timely installation and availability of materials.

STORMWATER UTILITY
CONSTRUCTION SITE EROSION CONTROL REQUIREMENTS

NOTE: EROSION CONTROL MEASURES ARE REQUIRED. THIS SHALL BE INSTALLED PRIOR TO EXCAVATING OR A STOP WORK ORDER WILL BE ISSUED.

All construction site activity in the City of Saint Peter shall include the necessary precautions to control and mitigate the erosion of soil, sediment, silt, gravel, or other material onto adjacent roadways and properties. The Property Owner and/or Permit Holder for the construction site shall be responsible for complying with the requirements set forth below, including activities by subcontractors, suppliers, or others involved with the construction project. The list represents minimum requirements for all sites – larger projects or projects located on erosion prone or erosion sensitive sites may be subject to additional measures at the discretion of the Building Department or the Stormwater Utility.

1. Construction sites will be required to install erosion control measures. Construction site exits must have a rock entrance that meets or exceeds Standard Detail Plate No: 3005 or an alternative approved in advance by the Public Works Director. Silt fence shall be installed in compliance with Standard Detail Plate No: 3003 and/or 3004 to protect the adjacent properties and be maintained until all lawn or landscaping is installed.
2. The MPCA has determined that all areas disturbed by excavation and backfilling operations which exposed soil must be stabilized no later than 7 days after the construction activity in that portion of the site has temporarily or permanently ceased.
3. All materials, tracked or otherwise deposited on roadways adjacent to a construction site or on roadways being used as haul routes for material being delivered to or removed from a site, shall be cleaned daily, unless more frequent cleaning is required by the Stormwater Utility.
4. All material, which is deposited on adjacent roadways as a result of a precipitation event, shall be removed, including the cleaning of storm sewer or overland drainage ditches, within 24 hours following the event.
5. Should the Property Owner/Permit Holder fail to provide adequate erosion and sediment control or to clean the material from the roadway as needed/directed the following steps may be taken:
   a. A Field Compliance Order or Notice of Violation will be issued.
   b. If the problem still exists and is not corrected in the timeframe indicated in the Field Compliance Order or Notice of Violation, the City may make provisions to perform corrective action. All costs incurred by the City for said corrective action shall be billed to the Property Owner/Permit Holder.
   c. No inspections shall be done and a Certificate of Occupancy will not be issued until such time as payment(s) for the work have been made.
   d. Issuance of additional permits to the Permit Holder for other construction projects within the City of Saint Peter will be withheld until such time as corrective action is completed.

I, _____, the Property Owner/Permit Holder for the construction activity taking
Name

place at _____ in the City of Saint Peter declares that I have read,
Address

Understood, and will abide by the conditions listed above regarding Erosion Control on this project.

_ _____
Signed

_ _____ _____
Date Telephone Number

STORMWATER UTILITY
LAND DISTURBING PERMIT
CITY OF SAINT PETER
Building Department 934-0662 or Public Works 934-0670

Permit No: _____

☐**OBSTRUCTION** ☐**RIGHT-OF-WAY/EASEMENTS** ☐**PRIVATE PROPERTY**

Project Location: _____
(Street, property address or legal description, or distance and direction from nearest public street intersection)

Nature of Work: _____

Method of Installation: _____

Number of Disturbance Areas: _____ Total Amount of Proposed Land Disturbance: _____ acres

ATTACH: A scale drawing of the project showing existing and proposed obstructions/structures, location and depth of land disturbance, and method of installation. Existing and proposed 2-ft interval contours are required for all projects 2500 SF or larger unless waived by the Public Works Director.

Are lane closures or traffic detours proposed? ☐ Yes ☐ No Duration: _____

ATTACH: A plan for each proposed lane closure and/or detour showing the route and traffic control. All plans must be pre-approved in writing by the Department of Public Works and written notice is required a minimum 3-working days prior to installation, change, or removal except when directed by the Department of Public Works or Law Enforcement.

APPLICANT _____ PHONE _____
PRINT

ADDRESS _____
STREET CITY STATE ZIP

EMAIL _____

PARTY PERFORMING WORK _____

CONTACT _____ EMERGENCY (24HR) PHONE _____

ADDRESS _____
STREET CITY STATE ZIP

EMAIL _____

The undersigned understands and accepts the terms and conditions of this permit and agrees to fully comply with all rules, standards and ordinances regulating the work. The permittee agrees to provide an instrument of surety in the amount of $3000 for sites up to 3-acres and $1000 for each additional 1-acres or portion thereof.

Signed: _____ Title: _____ Date: _____

This permit will expire the sooner of 90 days from the date approved or the end of the calendar year. A final inspection is required with each permit. Stormwater Utility 1-working day prior to set up an appointment for inspection at 507-934-0670. A copy of the MN Pollution Control Agency (MPCA) permit must be provided to the City and posted onsite prior to begin of land disturbance for all sites with 1.0-acres or more of land disturbance.

MPCA permit website: www.pca.state.mn.us/index.php/water/water-types-and-programs/stormwater/construction-stormwater/index.html

CITY USE ONLY

Permit Fee $ _____ Receipt No. _____

FINANCIAL SURETY $ _____ TYPE OF SURETY: ☐Bond ☐Cash ☐Certified Check ☐Letter of Credit

In consideration of agreement to comply in all respects with the regulations and codes of the City of Saint Peter covering such operations, and pursuant to authorization duly given by said City of Saint Peter, permission is hereby granted for the work to be done as described in the above application with said work to be done in accordance with special provisions as attached:

APPROVED BY _____ DATE: _____

Inspection: ☐ **Meets Compliance: no further work is required.** ☐ **Does not meet compliance. Follow up work is needed.**

INSPECTED BY _____ DATE: _____

Updated 4/22/15

Permit No. _____

CITY OF SAINT PETER
CURB & GUTTER/DRIVEWAY/CURB CUT APPLICATION

Building Department 934-0662 or Department of Public Works 934-0670

Site Address: _____

Type of property: ☐ Single-family residential ☐ Multi-family residential ☐ Commercial /Industrial

Application Name _____ Cell Phone No. _____

Applicant Address_____

City _____ State_____ Zip _____

Email address _____

Driveway / Access Information

Type of application: ☐ New Construction ☐ Replacement ☐ Alteration

Type of Work: ☐ Driveway ☐ Curb Cut ☐ Apron ☐ Curb/gutter work

Proposed driveway width:_____ Proposed curb cut length:_____

Description of Project: _____

_____

I (we) the undersigned, herewith make application for permission to construct the access driveway at the above location, said driveway to be constructed to conform with regulations and conditions of the City of Saint Peter and to any special provisions included in the permit. It is agreed that all work will be done to the satisfaction of the City of Saint Peter within 90 days. It is further agreed that no work in connection with this application will be started until the application is approved. It is expressly understood that this permit is conditioned upon replacement or restoration

Applicant Name _____ Date _____

Signature _____

Property Owner Name _____ Date _____

Signature _____

Applicant will set up a pre and post inspection with the Stormwater Utility (507-934-0670) prior to pouring the driveway, sidewalk and curb and gutter. Please provide a 4- hour notice for an inspection. If the applicant does not call for a pre and/or post inspection, the City will cash the $300.00 deposit for this permit. If the work is found to be out of compliance, the applicant will have 14 days to correct the issue and call for an additional inspection. If the correction is not done within 14 days, the city will make arrangements to have the additional work completed and billed to the applicant. Additional permits will not be issued to the applicant until all bills are paid. If the work completed is inspected and meets city compliance the $300.00 deposit will be returned to the applicant after the final inspection is completed and the permit is closed out.

This permit is good for up to 90 days following authorization and will be expire at the end of the year if not completed.

Driveway / Access Diagram

The following must be included on the drawing below:

1. Lot width and depth
2. Location of the house, garage, sidewalk(s)
3. Location and dimensions of **existing** driveway, sidewalks, and curb cuts (as applicable)
4. Location and dimensions of the **proposed** driveway, sidewalks, and curb cuts
5. Distance from the **proposed** driveway to all property lines
6. Location of water shut-off valve (if shut-off valve is located within the proposed driveway area, applicant must purchase a casing and cover, prior to proposed driveway work.) See Standard detail # 6002

☐ Pre inspection completed Date: _____ Initials:_____

☐ Allowed to pour concrete against asphalt Date: _____ Initials:_____

☐ Asphalt must be removed in roadway and a form is to be used to assure flow line
Date: _____ Initials:_____

☐ Post inspection completed Date: _____ Initials:_____

☐ Permit is complete and the deposit can be returned
Inspector: _____ Date :_____

2013 Minnesota Statutes – Excavation

216D.03 NOTIFICATION CENTER.

Subdivision 1.**Participation.**

An operator shall participate in and share in the costs of one statewide notification center operated by a vendor selected under subdivision 2.

Subd. 2.**Establishment of notification center; rules.**

(a) The notification center services must be provided by a nonprofit corporation approved in writing by the commissioner. The nonprofit corporation must be governed by a board of directors of up to 20 members, one of whom is the director of the Office of Pipeline Safety. The other board members must represent and be elected by operators, excavators, and other persons eligible to participate in the center. In deciding to approve a nonprofit corporation, the commissioner shall consider whether it meets the requirements of this paragraph and whether it demonstrates that it has the ability to contract for and implement the notification center service.

(b) The commissioner shall adopt rules:

(1) establishing a notification process and competitive bidding procedure for selecting a vendor to provide the notification service;

(2) governing the operating procedures and technology needed for a statewide notification center; and

(3) setting forth the method for assessing the cost of the service among operators.

(c) The commissioner shall select a vendor to provide the notification center service. The commissioner may advertise for bids as provided in section 16C.06, subdivisions 1 and 2, and base the selection of a vendor on best value as provided in section 16C.06, subdivision 6. The commissioner shall select and contract with the vendor to provide the notification center service, but all costs of the center must be paid by the operators. The commissioner may at any time appoint a task force to advise on the renewal of the contract or any other matter involving the center's operations.

(d) An operator may submit a bid and be selected to contract to provide the notification center service under paragraph (a) or (c). The commissioner shall annually review the services provided by the nonprofit corporation approved under paragraph (a) or the vendor selected under paragraph (c).

Subd. 3.**Cooperation with local government.**

In establishing operating procedures and technology for the statewide notification center, the board of directors or the commissioner must work in cooperation with the League of Minnesota Cities, the Association of Minnesota Counties, and the Township Officers' Association. The purpose of this cooperation is to maximize the participation of local governmental units that issue permits for activities involving excavation to assure that excavators receive notice of and comply with the requirements of sections 216D.01 to 216D.07.

Subd. 4.**Notice to local government.**

The notification center shall provide local governmental units with a master list, by county, of the operators in the county who are participants in the notification center, and the telephone number and mailing address of the notification center.

History: *1987 c 353 s 9*; *1997 c 187 art 1 s 15*; *1998 c 386 art 2 s 69*

216D.04 EXCAVATION; LAND SURVEY.

Subdivision 1.**Notice required; contents.**

(a) Except in an emergency, an excavator shall and a land surveyor may contact the notification center and provide notice at least 48 hours, excluding Saturdays, Sundays, and holidays and not more than 14 calendar days before beginning any excavation or boundary survey. An excavation or boundary survey begins, for purposes of

this requirement, the first time excavation or a boundary survey occurs in an area that was not previously identified by the excavator or land surveyor in the notice.

(b) The notice may be oral or written, and must contain the following information:

(1) the name of the individual providing the notice;

(2) the precise location of the proposed area of excavation or survey;

(3) the name, address, and telephone number of the individual or individual's company;

(4) the field telephone number, if one is available;

(5) the type and extent of the activity;

(6) whether or not the discharge of explosives is anticipated;

(7) the date and time when the excavation or survey is to commence; and

(8) the estimated duration of the activity.

Subd. 1a.**Plans for excavation.**

(a) Any person, prior to soliciting bids or entering into a contract for excavation, shall provide a proposed notice to the notification center to obtain from the affected operators of underground facilities the type, size, and general location of underground facilities. Affected operators shall provide the information within 15 working days. An operator who provides information to a person who is not a unit of government may indicate any portions of the information which are proprietary and may require the person to provide appropriate confidentiality protection. The information obtained from affected operators must be submitted on the final drawing used for the bid or contract and must depict the utility quality level of that information. This information must be updated not more than 90 days before completion of the final drawing used for the bid or contract.

(b) This subdivision does not apply to bids and contracts for:

(1) routine maintenance of underground facilities or installation, maintenance, or repair of service lines;

(2) excavation for operators of underground facilities performed on a unit of work or similar basis; or

(3) excavation for home construction and projects by home owners.

(c) A person required by this section to show existing underground facilities on its drawings shall conduct one or more preliminary design meetings during the design phase to communicate the project design and coordinate utility relocation. Affected facility operators shall attend these meetings or make other arrangements to provide information.

(d) A person required by this section to show existing underground facilities on its drawings shall conduct one or more preconstruction meetings to communicate the project design and coordinate utility relocation. Affected facility operators and contractors shall attend these meetings or make other arrangements to provide information.

(e) This subdivision does not affect the obligation to provide a notice of excavation as required under subdivision 1.

Subd. 2.**Duties of notification center; regarding notice.**

The notification center shall assign an inquiry identification number to each notice and retain a record of all notices received for at least six years. The center shall immediately transmit the information contained in a notice to every operator that has an underground facility in the area of the proposed excavation or boundary survey.

Subd. 3.**Locating underground facility; operator.**

(a) Prior to the excavation start time on the notice, an operator shall locate and mark or otherwise provide the approximate horizontal location of the underground facilities of the operator and provide readily available

information regarding the operator's abandoned and out-of-service underground facilities as shown on maps, drawings, diagrams, or other records used in the operator's normal course of business, without cost to the excavator. The excavator shall determine the precise location of the underground facility, without damage, before excavating within two feet of the marked location of the underground facility.

(b) Within 96 hours or the time specified in the notice, whichever is later, after receiving a notice for boundary survey from the notification center, excluding Saturdays, Sundays, and holidays, unless otherwise agreed to between the land surveyor and operator, an operator shall locate and mark or otherwise provide the approximate horizontal location of the underground facilities of the operator, without cost to the land surveyor.

(c) For the purpose of this section, the approximate horizontal location of the underground facilities is a strip of land two feet on either side of the underground facilities.

(d) Markers used to designate the approximate location of underground facilities must follow the current color code standard used by the American Public Works Association.

(e) If the operator cannot complete marking of the excavation or boundary survey area before the excavation or boundary survey start time stated in the notice, the operator shall promptly contact the excavator or land surveyor.

(f) After December 31, 1998, operators shall maintain maps, drawings, diagrams, or other records of any underground facility abandoned or out-of-service after December 31, 1998.

(g) An operator or other person providing information pursuant to this subdivision is not responsible to any person, for any costs, claims, or damages for information provided in good faith regarding abandoned, out-of-service, or private or customer-owned underground facilities.

Subd. 4.**Locating underground facility; excavator or land surveyor.**

(a) The excavator or land surveyor shall determine the precise location of the underground facility, without damage, before excavating within two feet on either side of the marked location of the underground facility.

(b) If the excavator or land surveyor cancels the excavation or boundary survey, the excavator or land surveyor shall cancel the notice through the notification center.

(c) The notice is valid for 14 calendar days from the start time stated on the notice. If the activity will continue after the expiration time, then the person responsible for the activity shall serve an additional notice at least 48 hours, excluding Saturdays, Sundays, and holidays, before the expiration time of the original notice, unless the excavator makes arrangements with the operators affected to periodically verify or refresh the marks, in which case the notice is valid for six months from the start time stated on the notice.

(d) The excavator is responsible for reasonably protecting and preserving the marks until no longer required for proper and safe excavation near the underground facility. If the excavator has reason to believe the marks are obliterated, obscured, missing, or incorrect, the excavator shall notify the facility operator or notification center in order to have an operator verify or refresh the marks.

History: *1987 c 353 s 10; 1992 c 493 s 5; 1993 c 341 art 1 s 21; 1997 c 196 s 1; 1998 c 348 s 1-3; 2004 c 163 s 2-6*

216D.05 PRECAUTIONS TO AVOID DAMAGE.

An excavator shall:

(1) plan the excavation to avoid damage to and minimize interference with underground facilities in and near the construction area;

(2) use white markings for proposed excavations except where it can be shown that it is not practical;

(3) maintain a clearance between an underground facility and the cutting edge or point of any mechanized equipment, considering the known limit of control of the cutting edge or point to avoid damage to the facility;

(4) provide support for underground facilities in and near the construction area, including during backfill operations, to protect the facilities; and

(5) conduct the excavation in a careful and prudent manner.

History: *1987 c 353 s 11*; *1998 c 348 s 4*; *2004 c 163 s 7*

216D.06 DAMAGE TO FACILITY.

Subdivision 1.**Notice; repair.**

(a) If any damage occurs to an underground facility or its protective covering, the excavator shall notify the operator promptly. When the operator receives a damage notice, the operator shall promptly dispatch personnel to the damage area to investigate. If the damage results in the escape of any flammable, toxic, or corrosive gas or liquid or endangers life, health, or property, the excavator responsible shall immediately notify the operator and the 911 public safety answering point, as defined in section 403.02, subdivision 19, and take immediate action to protect the public and property. The excavator shall also attempt to minimize the hazard until arrival of the operator's personnel or until emergency responders have arrived and completed their assessment. The 911 public safety answering point shall maintain a response plan for notifications generated by this section.

(b) An excavator shall delay backfilling in the immediate area of the damaged underground facilities until the damage has been investigated by the operator, unless the operator authorizes otherwise. The repair of damage must be performed by the operator or by qualified personnel authorized by the operator.

(c) An excavator who knowingly damages an underground facility, and who does not notify the operator as soon as reasonably possible or who backfills in violation of paragraph (b), is guilty of a misdemeanor.

Subd. 2.**Cost reimbursement.**

(a) If an excavator damages an underground facility, the excavator shall reimburse the operator for the cost of necessary repairs, and for a pipeline the cost of the product that was being carried in the pipeline and was lost as a direct result of the damage.

(b) Reimbursement is not required if the damage to the underground facility was caused by the sole negligence of the operator or the operator failed to comply with section 216D.04, subdivision 3.

Subd. 3.**Prima facie evidence of negligence.**

It is prima facie evidence of the excavator's negligence in a civil court action if damage to the underground facilities of an operator resulted from excavation, and the excavator failed to give an excavation notice under section 216D.04 or provide support as required by section 216D.05.

History: *1987 c 353 s 12*; *1999 c 43 s 1*

216D.07 EFFECT ON LOCAL ORDINANCES.

(a) Sections 216D.01 to 216D.07 do not affect or impair local ordinances, charters, or other provisions of law requiring permits to be obtained before excavating.

(b) A person with a permit for excavation from the state or a public agency is subject to sections 216D.01 to 216D.07. The state or public agency that issued a permit for excavation is not liable for the actions of an excavator who fails to comply with sections 216D.01 to 216D.07.

History: *1987 c 353 s 13*

Copyright © 2013 by the Office of the Revisor of Statutes, State of Minnesota. All rights reserved.

Are you in compliance?
Residential lot requirement reminders!

1. Residential Rates for SAC and WAC are as follows:
    - Sewer Access Charge is $1,500.00
    - Water Access Charge is $1,800.00
2. Weekly inspections will be conducted by the permit holder. It is the contractor's responsibility to make sure all erosion and sediment controls are in place and in compliance. The contractor is responsible for inspecting their own job site as indicated in the original Stormwater Pollution Prevention Plan for that subdivision. If you do not have a copy of the SWPPP you can get one from the subdivision developer. Inspections are completed weekly and after every ½" of rainfall. Please have a mailbox with a rain gauge installed on site so the inspectors can review your inspections. These inspections will be done randomly.
3. Dust Control - When saw cutting existing curb to install the driveway the contractor must use water to control the dust. The goal is to protect the downstream catch basins with the appropriate Best Management Practice (BMP). When the slurry is dry the contractor is responsible for sweeping up the dry power and disposing of it properly.
4. When installing the curb cut please call the stormwater utility to set up an inspection. Please follow standard detail #7020R. Remember when existing bituminous street pavement is in place, the contractor needs to remove existing pavement a minimum of 6" and pour the new concrete curb. Place bituminous patch to match existing pavement section.
5. If owner/contractor is using the right-of-way and damage occurs to the sidewalk, curbing or turf the owner/contractor is responsible for replacement. A certificate of occupancy will not be issued until repairs have been made.
6. Portable toilets are not allowed in the right-of-way.
7. Dumpsters are allowed on the street and in the right-of-way when an obstruction permit is obtained. If owner/contractor does not want to obtain a permit please place the dumpster on private property.
8. Vacant lots adjacent to construction property are not intended for construction purposes. If permission is granted from the owner, a separate security deposit for each disturbed lot will be required. If the area disturbed is not corrected to city standards the security deposit will be used to restore the area.
9. If the construction site is not stabilized prior to winter, the permit holder is responsible to provide temporary stabilization for the winter months. Erosion and Sediment control still needs to be installed and maintained during winter months.
10. Please review the Saint Peter Turf Establishment requirements for occupancy. Please note that a timeline has been established for stabilization. If the permit holder is the homeowner and they have not seen this packet, please inform them of the areas that are sod and the areas that can be seeded according to the Standard Detail #3022 or #3023.
11. Bonds and Surety:
    a. Homeowners can sign a waiver (not contractors who are building on property they own) they are assuming responsibility for someone else.
    b. Contractors who own property still need to put down a deposit because they can sell the property BEFORE the project is finished and then the City cannot assess any cost so the agreement is invalid.

SAINT PETER ELECTRIC UTILITY
Electric Services Requirements

Form Date: 2/28/02

Residential Installation:
Customer is responsible to install or pay for the installation of the secondary service. The secondary service will be installed from the transformer or a secondary pedestal, identified by the Electric Utility, to the meter socket located on the house. The Electric Utility will make the final connection at the transformer or pedestal for the electric service. This connection will only be made after the electrical inspector has made his inspection and the Electric Utility has a copy of the wiring affidavit (blue slip copy). All information will be completed correctly on the wiring affidavit (address of the service and owner's name). The customer will have to call one (1) full working day before connection is made. All meter sockets will be installed outside.

Commercial and Industrial Installations:
Commercial or industrial meter sockets will be a 200 amp with by-pass, unless the customer warrants a larger service. The Electric Utility will determine where the current transformers and the meter socket would be located. The cost of the current transformer meter sockets will be billed to the customer and supplied by the Electric Utility. The installation of the current transformers will be completed by the Electric Utility. The customer will provide the connecting lugs in the transformer and the pipe from the transformer to the meter socket location. All current transformers and meter sockets will be installed outside. The commercial or industrial services may require the Electric utility to purchase a pad-mount transformer for the service and the lead time may be up to or longer than 20 weeks.

Schedule for Installation:
Temporary Service: A wiring affidavit must be provided to the Electric Utility two (2) full working days before the customer's service will be connected. All temporary service will be dug-in/installed by the electrician.

Permanent Service: A wiring affidavit must be provided to the Electric Utility three (3) full working days before the customer desires to have the service installed by the Electric Utility at the customer's expense. If the service is to be installed by the Electric Utility before any locate can be sent in the meter socket will have been installed. Reminder locates take forty-eight (48) hours before you can dig.

Frost Conditions:
From November 15th to March 15th, there will be an extra charge for equipment wear of $20.00 per foot to install service lines. If the service is installed above ground during frost periods, the unsalvageable material and labor cost will be the customer's responsibility to pay. This charge will be added to the normal material and labor costs if the utility installs the electric service.

City of Saint Peter
405 West Saint Julien Street
Saint Peter, Minnesota 56082-1874
507-934-0670

Saint Peter Turf Establishment

Saint Peter Utility Standard Detail # 3022 or #3023

In order to ensure that turf is installed and established on building sites in a timely manner to prevent erosion, the City of Saint Peter has required the following procedures for the establishment of turf:

1. Interior lots shall be sodded from the roadside edge or the unpaved right-of-way to the back corners of the furthest-most building.
2. Corner lots with two sides of the lot adjacent to the street; in the "front yard", sod shall be installed from the roadside edge or the unpaved right-of-way in the front of the building to the back corners of the furthest-most building. Sod shall also be installed on the street side-yard within the boulevard commencing at the back corner of the further-most building to the rear lot line.
3. All areas that required silt fences during construction and along any portions of the lot that adjoin drainage easements shall be sodded.
4. Any remaining disturbed areas not mentioned above shall be seeded or sodded.
5. Silt fences must be maintained throughout the construction period until new vegetation is established.
6. Turf slopes in excess of 3:1 are prohibited.
7. The builder/homeowner is required to install sod in the minimum required areas within sixty (60) days after temporary occupancy. It is the responsibility of the owner to establish turf in the areas where sod is not required. Establishment means a thirty (30) day growth period after sod has been installed.
8. If occupancy has been granted between October 31st and April 15th the homeowner will then be given 60 days following April 15th to install sod in the minimum required areas. It is the responsibility of the owner to establish turf in the areas where sod is not required. Establishment means a thirty (30) day growth period after sod has been installed.
9. The City will collect a surety for turf establishment before any building permit is issued. The surety will be returned when the turf requirements have been approved. If these requirements are not met, the surety will be used to either complete the grading of the lot consistent with the grading plan and/or complete the installation and establishment of the sod and seed.
10. A 6" minimum separation from sod/landscaping to the bottom of siding is required.

Questions and/or comments may be directed to Stormwater Utility at 934-0670.

White Marking Your Dig Site

It Is Not An Option, It is Required

In 2004 and 2005, the laws and rules that govern the one-call system were changed. One of the changes you should be aware of now, firmly requires that the excavator white mark (paint and/or flags) the area of excavation, except where it can be shown to be not practical.

The Minnesota Office of Pipeline Safety, the state agency that enforces the laws and rules of the one-call system, is increasing enforcement of this requirement, and others throughout the one-call system. An excerpt of the current 216 D statute is below, with the white marking area highlighted.

Why should you white mark your dig site?

1. It is required by law. Infractions can be fined up to $1,000 per violation per day.
2. White markings reduce any confusion about where you will actually be digging. It helps make sure utility locators mark what you need to avoid hitting a utility line.
3. Utility locators can spend more time getting you a better locate, instead of spending time marking areas you don't need marked.
4. White marking is relatively inexpensive. White paint and flags are fairly cheap, compared with the cost to repair damage to a utility, or other possible expenses and liabilities if you hit a utility line. White paint and flags are available from several places right here in Saint Peter.

Statute

216D.05 Precautions to avoid damage.

An excavator shall:

(1) plan the excavation to avoid damage to and minimize interference with underground facilities in and near the construction area;

(2) **use white markings for proposed excavation except where it can be shown that it is not practicable**

White Paint (designed for upside-down marking) is locally available at:

- Fastenal Company, 106 West Grace Street
- Ace Hardware 201 South Minnesota Avenue

Questions?

If you have any questions about this requirement, or any other part of the Gopher State One-Call system, please contact one of the people listed here:

1. Brad Ardner, Minnesota Office Pipeline Safety, Mankato Office, (507) 389-7372
2. Dan Munthe, Minnesota Office Pipeline Safety, St. Paul Office, (651) 296-7364
3. Jon Eisele, Gopher State One-Call, (651) 681-7303
4. Amy Kamm, City of Saint Peter, (507) 934-0670

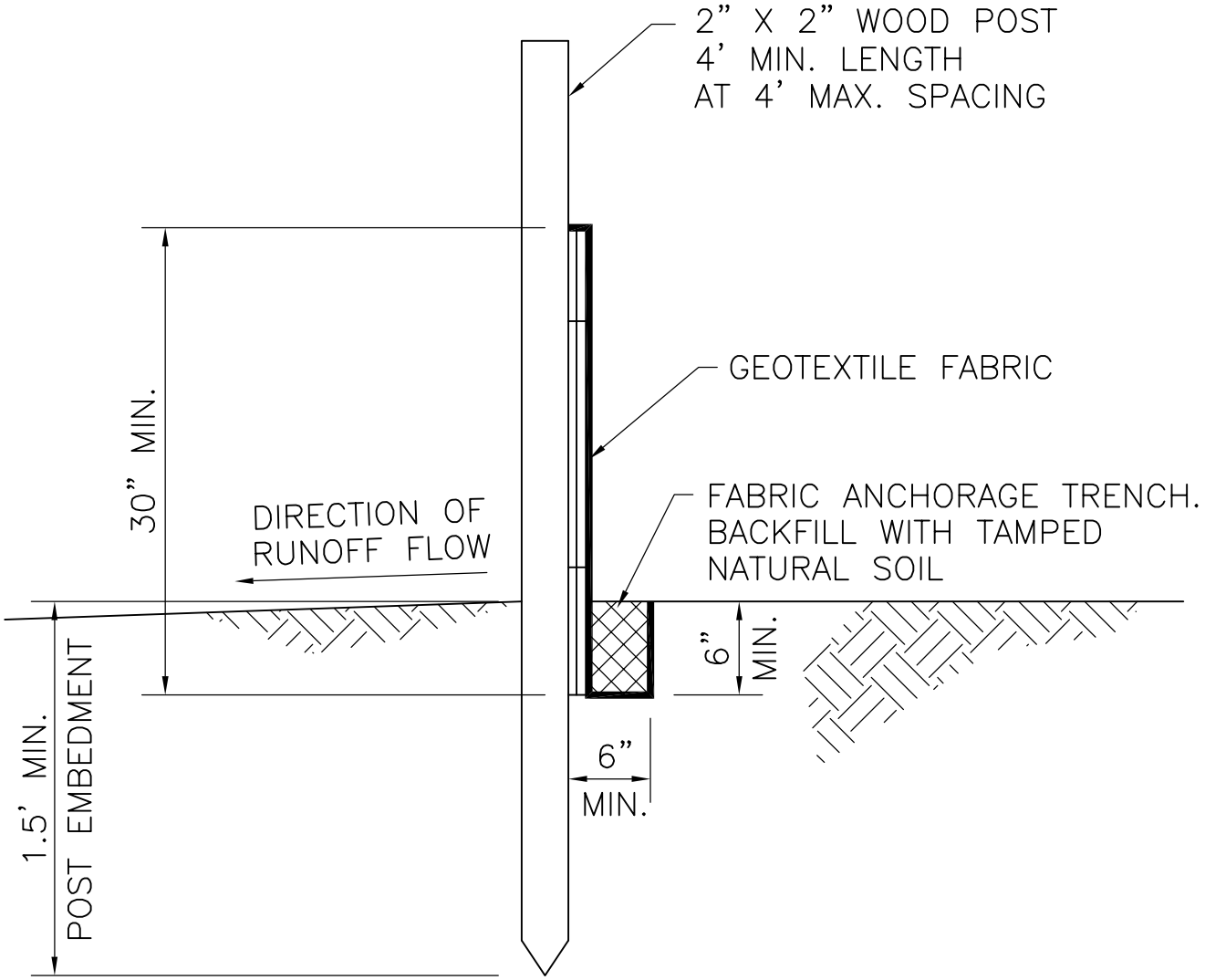

SILT FENCE – PRE ASSEMBLED

NOT TO SCALE

PLATE 3004

SILT FENCE - PRE ASSEMBLED	STANDARD DETAIL PLATE NO: **3004**
APPROVED: ADOPTED BY CITY COUNCIL ON JANUARY 12, 2004	CITY OF Saint Peter NICOLLET COUNTY, MINNESOTA WHERE HISTORY & PROGRESS MEET
REVISED:	
REMARKS:	
SAINT PETER UTILITY STANDARD DETAIL	

Y:\STPE\3004stpe.dwg 01-30-2007 11:27 am

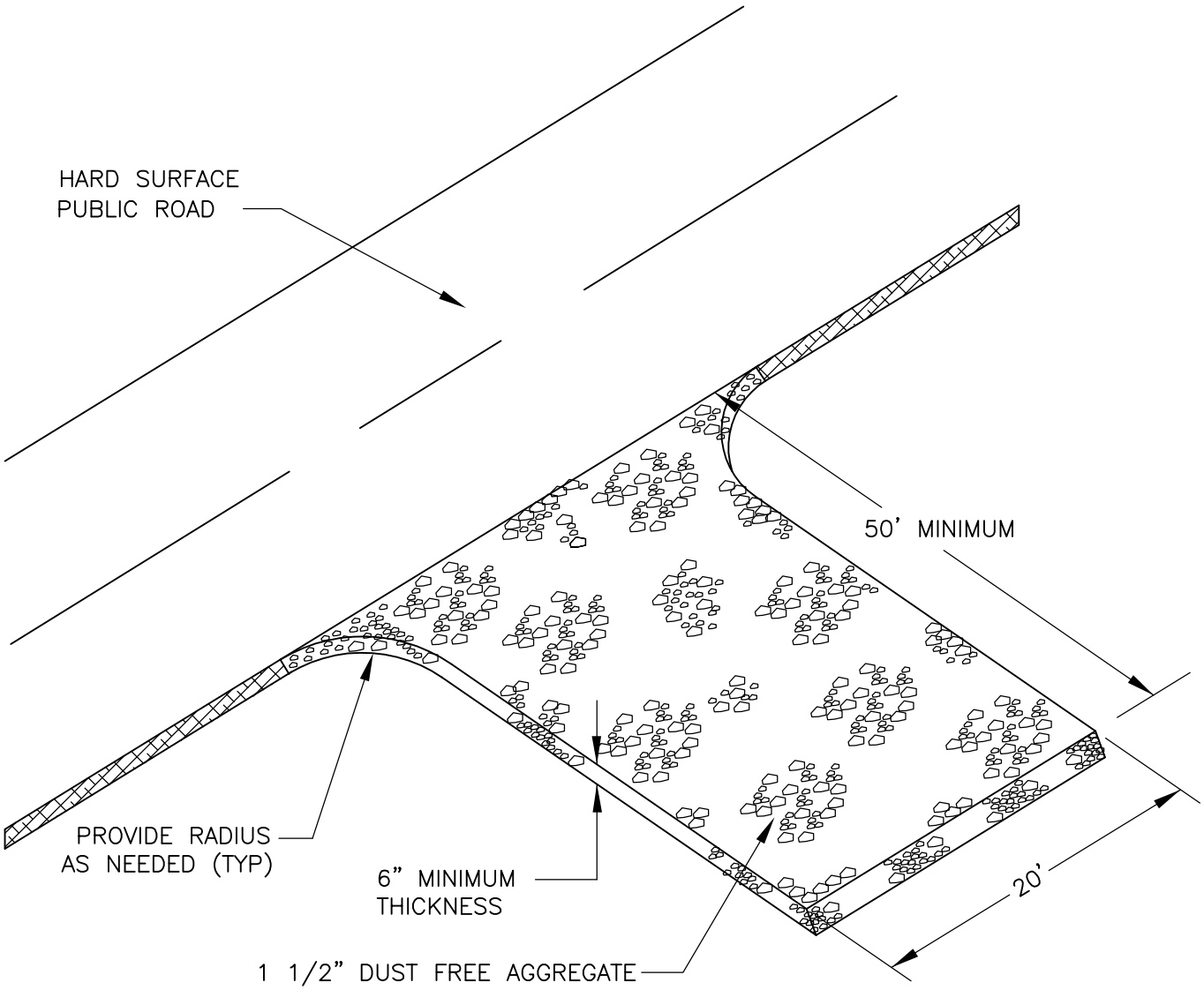

RESIDENTIAL EROSION CONTROL AT CONSTRUCTION SITE ENTRANCE

NOT TO SCALE

PLATE 3005R

RESIDENTIAL EROSION CONTROL AT CONSTRUCTION SITE ENTRANCE	STANDARD DETAIL PLATE NO: **3005R**
APPROVED: ADOPTED BY CITY COUNCIL ON JANUARY 12, 2004	CITY OF Saint Peter NICOLLET COUNTY, MINNESOTA WHERE HISTORY & PROGRESS MEET
REVISED: REVISION ADOPTED BY CITY COUNCIL ON FEBRUARY 26, 2007	
REMARKS:	
SAINT PETER UTILITY STANDARD DETAIL	

Y:\STPE\3005Rstpe.dwg 03-05-2007 1:55 pm

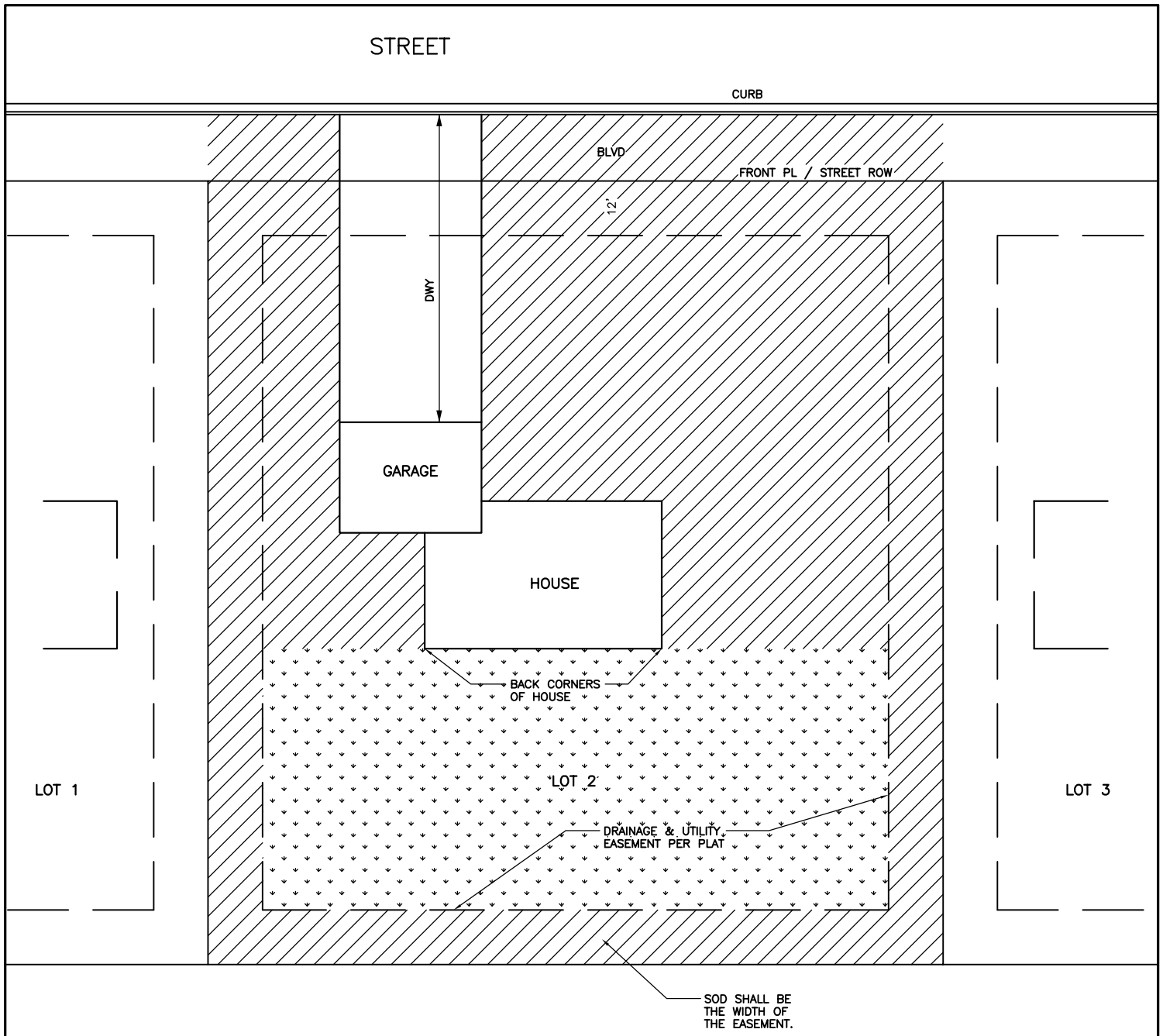

= MIN. MANDATORY SODDED AREA

= BACKYARD MAY BE SEEDED

TURF ESTABLISHMENT

STANDARD DETAIL PLATE NO:
3022

APPROVED: ADOPTED BY CITY COUNCIL ON APRIL 10, 2006

REVISED:

REMARKS:

SAINT PETER UTILITY STANDARD DETAIL

CITY OF Saint Peter
NICOLLET COUNTY, MINNESOTA
WHERE HISTORY & PROGRESS MEET

Y:\STPE\3022stpe.dwg 01-30-2007 11:35 am

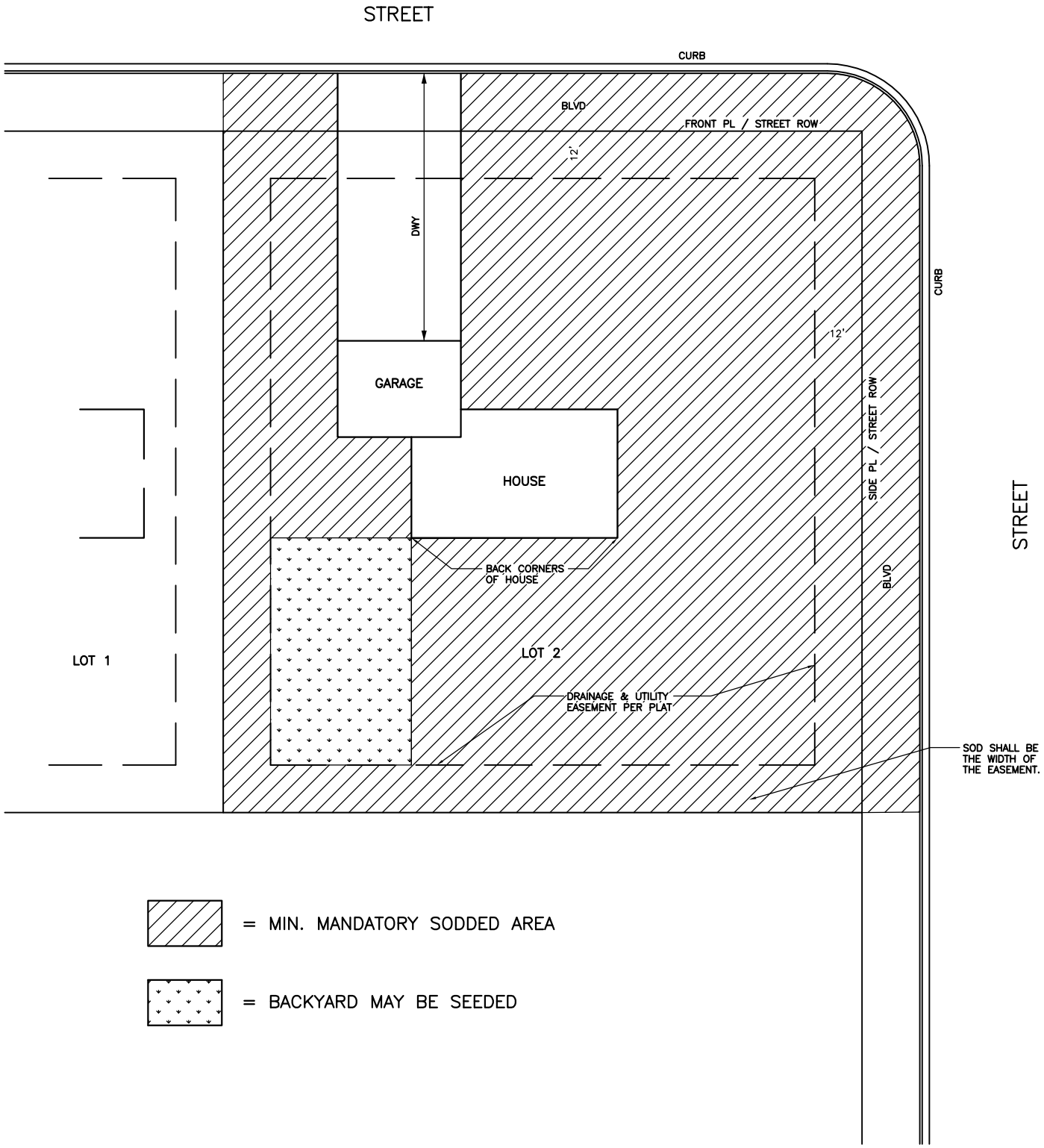

= MIN. MANDATORY SODDED AREA

= BACKYARD MAY BE SEEDED

TURF ESTABLISHMENT CORNER LOT

STANDARD DETAIL PLATE NO:
3023

APPROVED: ADOPTED BY CITY COUNCIL ON APRIL 10, 2006

REVISED:

REMARKS:

SAINT PETER UTILITY STANDARD DETAIL

CITY OF Saint Peter
NICOLLET COUNTY, MINNESOTA
WHERE HISTORY & PROGRESS MEET

Y:\STPE\3023stpe.dwg 01-30-2007 11:00 am

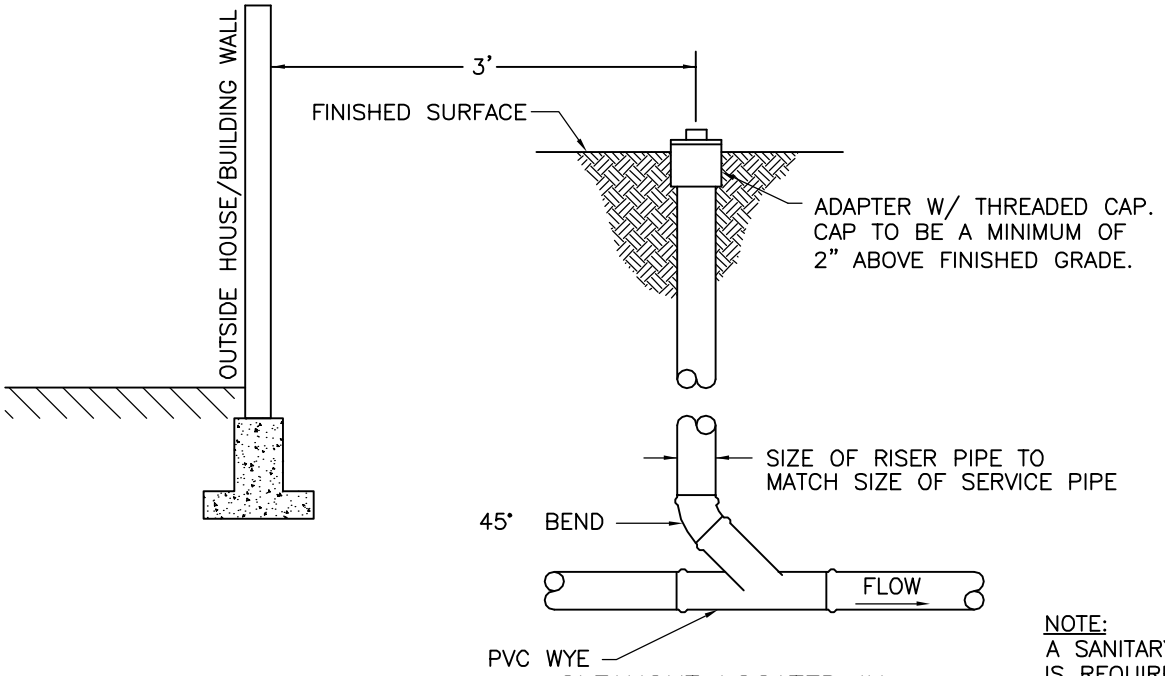

CLEANOUT LOCATED IN
GREEN AREA OR AGGREGATE SURFACE

NOTE:
A SANITARY SEWER CLEANOUT IS REQUIRED FOR EVERY 100 LF OF SANITARY SEWER SERVICE PIPE FROM THE SEWER MAIN TO THE HOUSE OR BUILDING WALL.

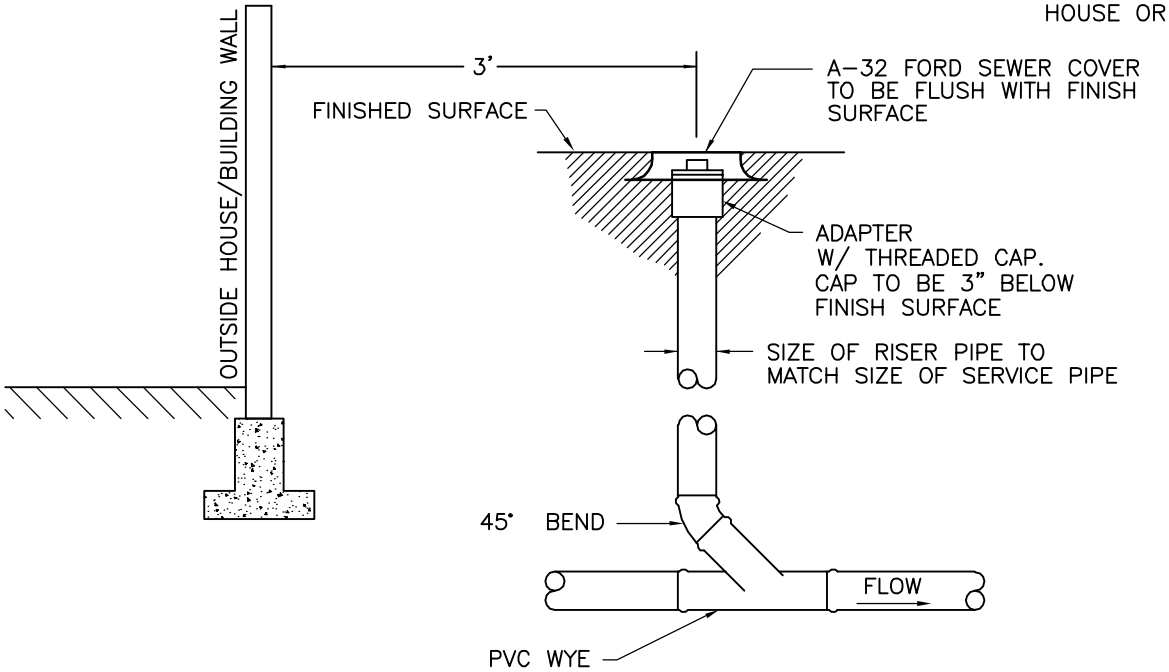

CLEANOUT LOCATED IN
BITUMINOUS OR CONCRETE SURFACE

SANITARY SEWER CLEANOUT

STANDARD DETAIL
PLATE NO:
5004

APPROVED: ADOPTED BY CITY COUNCIL ON JANUARY 12, 2004

REVISED: REVISION ADOPTED BY CITY COUNCIL ON AUGUST 8, 2011

REMARKS:

SAINT PETER UTILITY STANDARD DETAIL

CITY OF Saint Peter
NICOLLET COUNTY, MINNESOTA
WHERE HISTORY & PROGRESS MEET

Y:\STPE\5004stpe.dwg 8/3/11 7:36 am

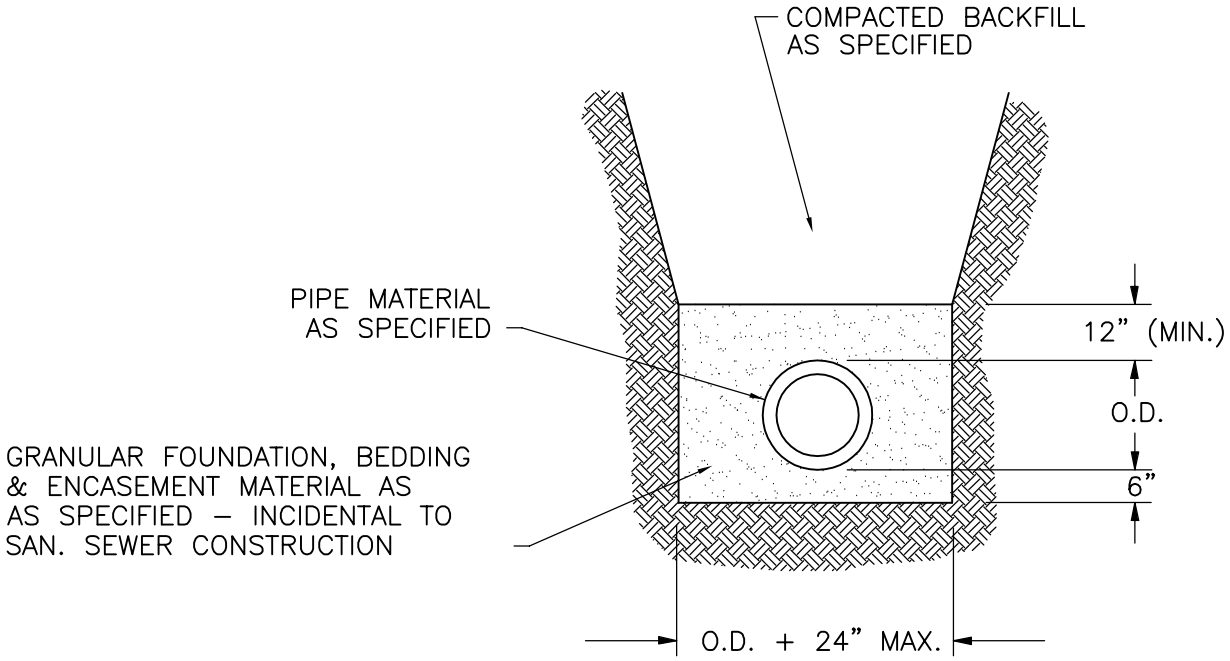

PVC SANITARY SEWER
TRENCH DETAIL

NOT TO SCALE

PLATE 5005

PVC SANITARY SEWER TRENCH DETAIL	STANDARD DETAIL PLATE NO: **5005**
APPROVED: ADOPTED BY CITY COUNCIL ON JANUARY 12, 2004	CITY OF Saint Peter NICOLLET COUNTY, MINNESOTA WHERE HISTORY & PROGRESS MEET
REVISED:	
REMARKS:	
SAINT PETER UTILITY STANDARD DETAIL	

Y:\STPE\5005stpe.dwg 01-30-2007 11:46 am

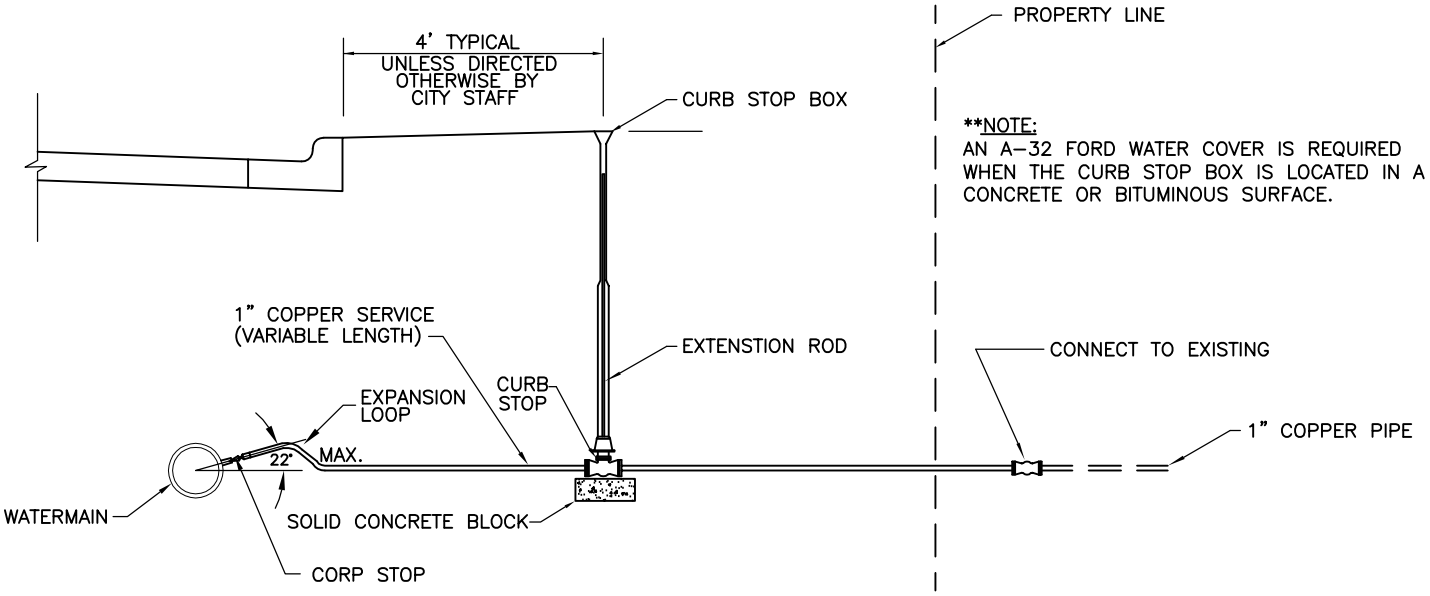

SAINT PETER WATER SERVICE INSTALLATION DETAIL – RECOMMENDED

(FOR COPPER PIPE FROM PROPERTY LINE TO METER IN UTILITY ROOM OF HOUSE/BUILDING.)

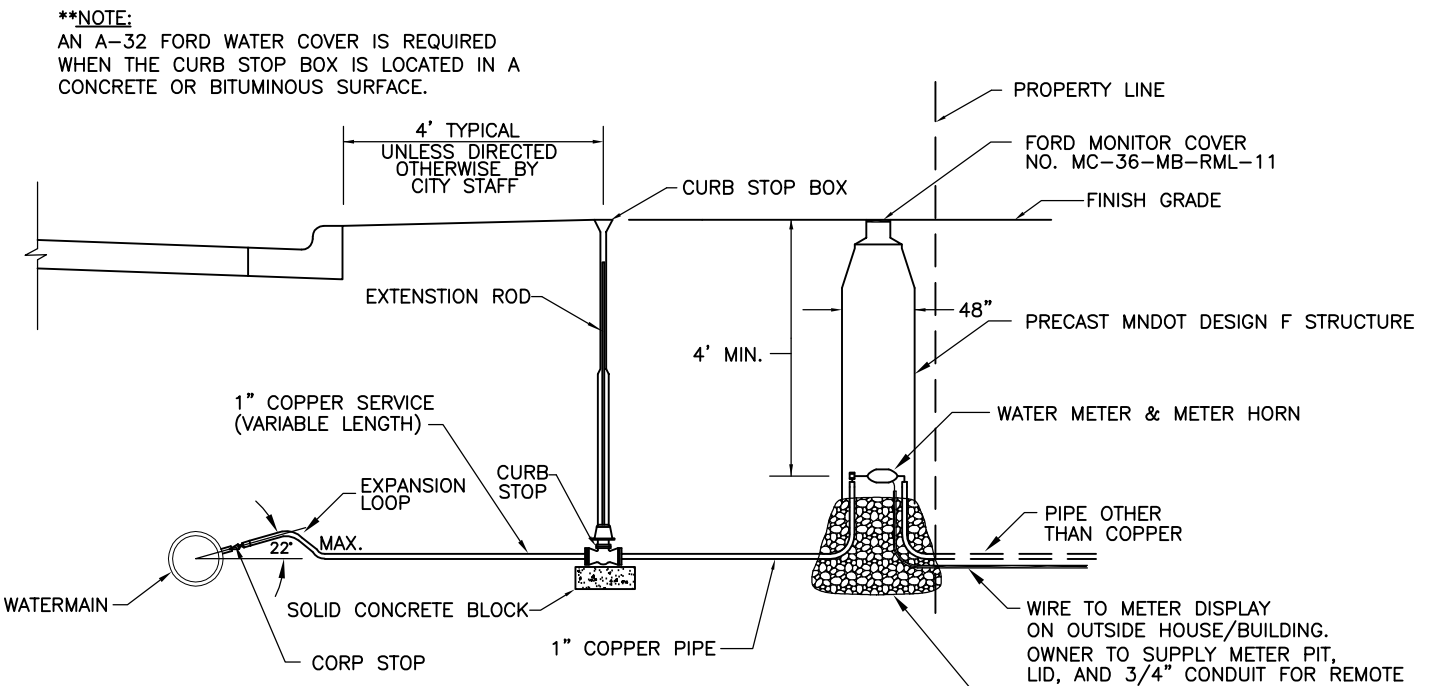

WATER SERVICE INSTALLATION DETAIL – OPTION 1

(FOR PIPE OTHER THAN COPPER FROM PROPERTY LINE TO HOUSE/BUILDING.)

PLATE 6003

WATER SERVICE INSTALLATION (FROM PROPERTY LINE TO HOUSE)	STANDARD DETAIL PLATE NO: **6003**
APPROVED: ADOPTED BY CITY COUNCIL ON DECEMBER 12, 2005	CITY OF Saint Peter, NICOLLET COUNTY, MINNESOTA — WHERE HISTORY & PROGRESS MEET
REVISED: REVISION ADOPTED BY CITY COUNCIL ON APRIL 10, 2006	
REMARKS:	
SAINT PETER UTILITY STANDARD DETAIL	

Y:\STPE\6003stpe.dwg 03-05-2007 4:49 pm

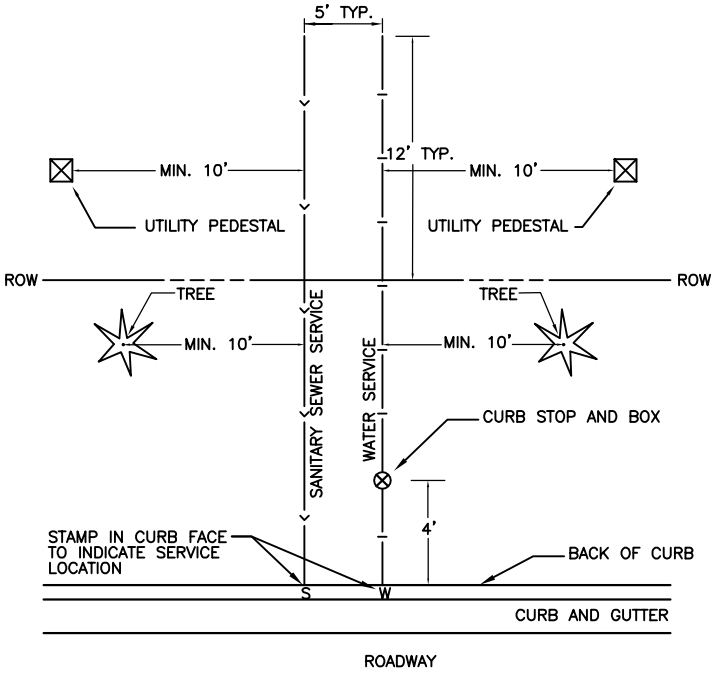

NOTE:
A MINIMUM OF 10 FEET OF HORIZONTAL CLEARANCE IS REQUIRED FROM UNDERGROUND SERVICES TO PERMANENT ABOVE GROUND FIXTURES SUCH AS TREES, UTILITY PEDESTALS, ETC.

PLAN VIEW

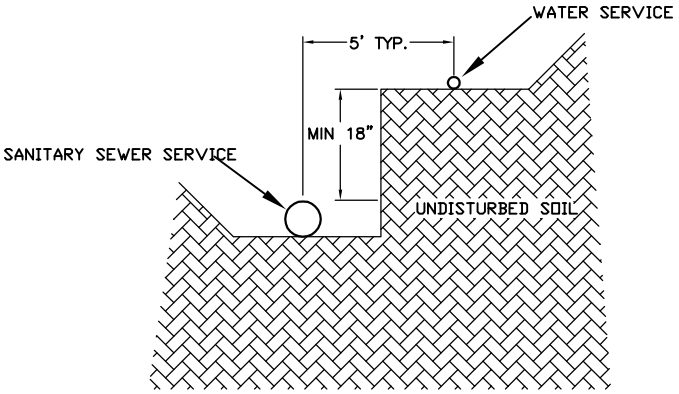

NOTE:
IF SANITARY SERVICE IS AT THE SAME ELEVATION AS THE WATER SERVICE, A HORIZONTAL SEPARATION OF 10 FEET SHALL BE MAINTAINED.

PROFILE VIEW

WATER & SANITARY SEWER SERVICE SEPARATION DETAIL

NOT TO SCALE

PLATE 6005

WATER & SANITARY SEWER SERVICE SEPARATION DETAIL	STANDARD DETAIL PLATE NO: **6005**
APPROVED: ADOPTED BY CITY COUNCIL ON FEBRUARY 26, 2007	CITY OF Saint Peter NICOLLET COUNTY, MINNESOTA WHERE HISTORY & PROGRESS MEET
REVISED:	
REMARKS:	
SAINT PETER UTILITY STANDARD DETAIL	

Y:\STPE\6005.dwg 03-05-2007 3:06 pm

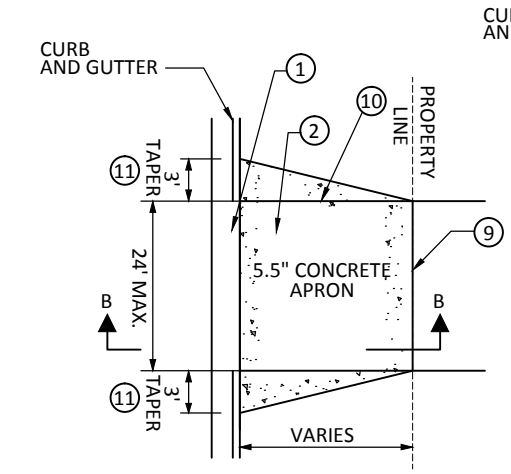

NO SIDEWALK

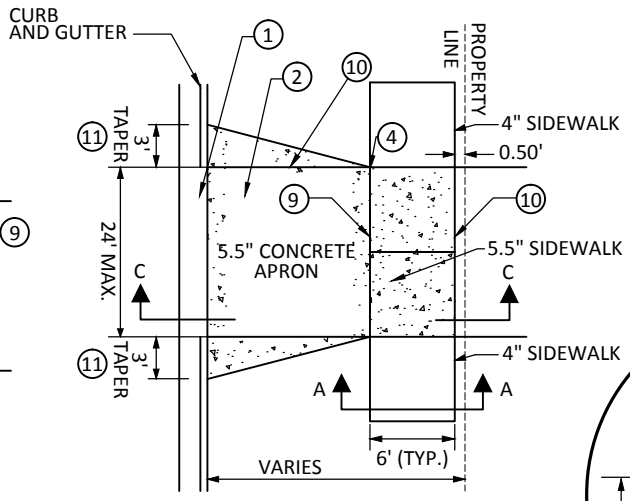

WITH SIDEWALK

WITH SIDEWALK
ADJACENT TO CURB
*SEE DETAIL 7020A

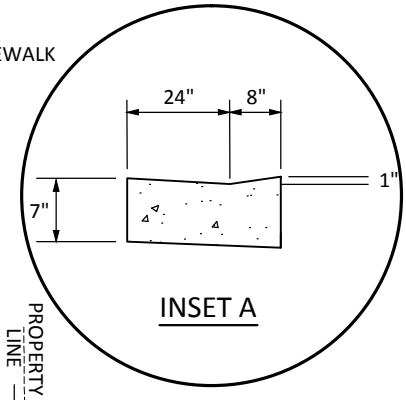

INSET A

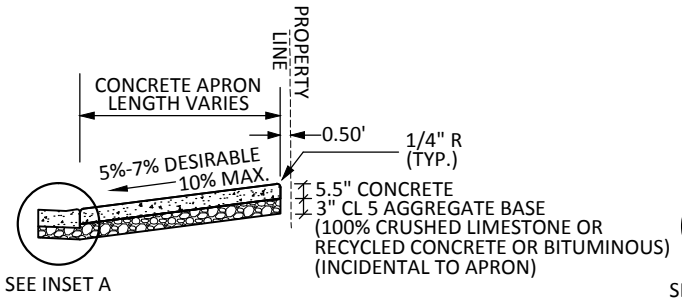

SECTION B-B THROUGH APRON

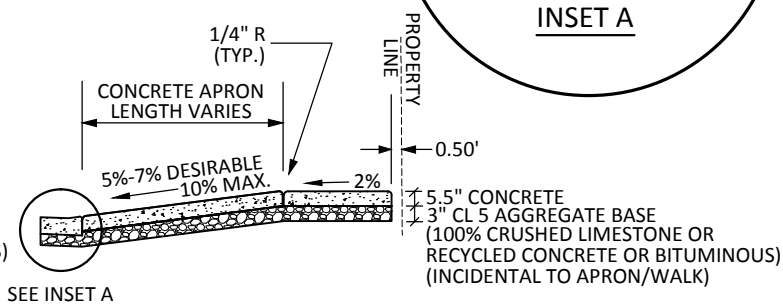

SECTION C-C THROUGH APRON

NOTES:

1. SEE "PEDESTRIAN CURB RAMP" DETAIL AND PLANS FOR PLACEMENT OF PEDESTRIAN CURB RAMP.
2. SLOPE OF DRIVEWAY TO PROPERTY LINE MAY VARY IF NO SIDEWALK IS REQUIRED.
3. MINNESOTA DEPARTMENT OF TRANSPORTATION STANDARD SPECIFICATIONS FOR CONSTRUCTION SHALL APPLY. CONCRETE MIX 3A32 WILL BE REQUIRED.
4. SIDEWALKS: REFERENCE SECTION 2521, CURB & GUTTER: REFERENCE SECTION 2531, DRIVEWAYS: REFERENCE SECTION 2531, AGGREGATE BASE: REFERENCE SECTION 2211
5. CONTRACTOR SEE PLANS FOR PLACEMENT OF WALK AND DIMENSIONS FOR CONSTRUCTION OF DRIVEWAYS.
6. 1/2" PRE FORMED JOINT FILLER MATERIAL-AASHTO M213 REQUIRED AT THE INTERSECTION OF ALL MAINLINE WALK WITH STATIONARY OBJECTS. (I.E., BUILDING FOUNDATION, EXISTING WALK, ETC.) (NOT REQUIRED WHEN CURB AND GUTTER OR WALK ARE ADJACENT TO BITUMINOUS PAVEMENT.)
7. CONCRETE DRIVEWAY PAVEMENT IS NOT TO BE POURED MONOLITHICALLY WITH CURB AND GUTTER.
8. DRIVEWAY OPENINGS SHALL BE A MAXIMUM OF 24' FROM BOTTOM OF 3' TAPER TO BOTTOM OF 3' TAPER.
9. 1/2" EXPANSION JOINT. PLACED AT 100 FT. INTERVALS FOR SIDEWALK.
10. CONTRACTION JOINT (FORMED OR SAWED)

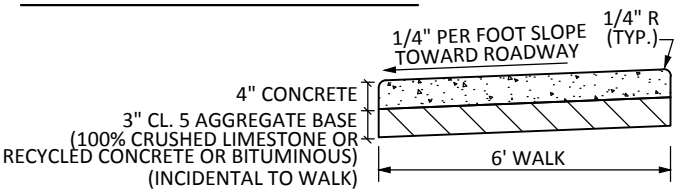

SECTION A-A THROUGH WALK

11. IF A 6' (FT) WIDE WALK IS ADJACENT TO BACK OF CURB, THEN THE CURB TAPER SHALL BE 10' (FT) IN LENGTH. IF A WALK ADJACENT TO BACK OF CURB IS WIDER THAN 6' (FT) AND CONTAINS A MINIMUM OF 6' (FT) WALKING AREA AT 2% CROSS SLOPE, THE CURB TAPER SHALL BE 6' (FT) IN LENGTH. * SEE DETAIL 7020A
12. CONCRETE WALK CONSTRUCTION JOINTS SHALL BE TOOLED OR SAW CUT AT 6 FT. INTERVALS.

RESIDENTIAL
CONCRETE WALK AND APRON

NOT TO SCALE

SAINT PETER STANDARD
PLATE 7020R

RESIDENTIAL CONCRETE WALK AND APRON	STANDARD DETAIL PLATE NO: **7020R**
APPROVED: ADOPTED BY CITY COUNCIL ON JANUARY 12, 2004	
REVISED: REVISION ADOPTED BY CITY COUNCIL ON APRIL 13, 2015	
REMARKS:	
SAINT PETER UTILITY STANDARD DETAIL	CITY OF Saint Peter NICOLLET COUNTY, MINNESOTA WHERE HISTORY & PROGRESS MEET

Natural gas service agreement

New residential development

CenterPoint Energy®

Please fill out completely and sign to ensure prompt service.

NEW SERVICE INFORMATION

Street address for new service _____

City / State / Zip _____

Is this address a county road or state highway? ○ Yes ○ No

Legal description: Lot _____ *Block* _____

Addition _____

Nearest cross street _____

CONSTRUCTION STATUS AT TIME OF APPLICATION

Basement/foundation in and backfilled? ○ Yes ○ No

Framed? ○ Yes ○ No

Graded to within 6 in. of final grade? ○ Yes ○ No

If no, date to be completed _____

Requested install date _____ *Closing date* _____

Estimated square footage _____

Dwelling type: ○ Townhouse ○ Single family ○ Other _____

DESIRED METER LOCATION

Facing the building from the street, where should the meter be installed?

○ Opposite garage,_____feet back from front corner

○ Other location _____

Please be specific or attach survey with meter location clearly marked.

Will meter location be subject to vehicle damage? ○ Yes ○ No

○ Check here if you would like all utility service lines installed in a single trench (joint trench). This service may not be available in all areas.

PARTY RESPONSIBLE FOR APPLICABLE CHARGES

Company name _____

Contact person _____

Phone ( ) _____ *Pager* ( ) _____

Fax ( ) _____ *Cell* ( ) _____

Mailing address _____

City / State / Zip _____

GAS LOAD INFORMATION

Please indicate the **number** of appliances that require natural gas:

_____ Furnaces or boilers (Total Btus _____)

_____ Water heaters _____ Dryers

_____ Fireplaces _____ Pool heaters

_____ Ranges, cooktops or ovens _____ Garage heaters

Do you have a heat pump? _____

What gas pressure is required for your home?

○ 2 psi (copper pipe) ○ 7 in. w.c. (black pipe)

I have read and understand all the terms and conditions as referenced on page two of this agreement, and agree to reimburse CenterPoint Energy for all applicable construction charges pursuant to rates and tariffs on file with the Minnesota Public Utilities Commission, including extraordinary charges such as directional boring if required. There is a basic customer charge of $6.50 per month, per meter. Out-of-season charges apply November 1 through March 31 (see page 2 for details). **Note: $4.00 per foot will be charged for footage over 75 feet, or for the entire service line length if a furnace or boiler is not the primary source of heat, or if a heat pump is used in conjunction with a gas furnace. CenterPoint Energy is not responsible for restoration of property after gas installation.**

Signature of applicant _____ *Date* _____

CenterPoint Energy
700 West Linden Avenue, PO Box 1165
Minneapolis, MN 55440-1165

Builders Hotline: 612-342-5123 or 1-800-342-4166
CenterPointEnergy.com

Fax: 612-321-5573 or 1-800-365-9188

For CenterPoint Energy use only

Inst#	*Premise#*	*MI#*	*SVC#*	
FuncLoc	*BP#*	*Sz/Typ/CI*	*Main#*	*Main Loc*
Map#	*LS/SS*	*Sec/Twp/Rng*	*Cross street*	

©2006 CenterPoint Energy

Natural gas service agreement

To avoid construction delays, plan for utilities during the design stage and use the following guidelines:

NATURAL GAS METER REQUIREMENTS (May vary by city)

- Maintaining the 3' clear zone is required.
  - 3' from fresh air intake or any opening to building
  - 3' from operating doors or windows
  - 3' from water spigots
  - 3' from any ignition source
- Avoid locations directly below roof valleys, water downspouts, decks, stairs or partial overhangs to help prevent damage from falling ice.
- Banked meters are preferable for townhouse building.
- Regulator and relief valve must be located where gas can escape freely away from any opening into the building.
- You must have all exterior walls framed before meter can be installed
- **Should there be a request to move the meter after the initial installation, or the customer does not adhere to the minimum clearance requirements detailed below, the customer will be responsible for all cost to relocate the meter.**
- Meter sets should be located away from potential damage from vehicles. Guard posts must be installed if meters may be exposed to vehicle damage. **Costs for installation:** 4 posts – $880; 3 posts – $820; 2 posts – $635; 1 post – $320.

Minimum clearances for gas meter installation

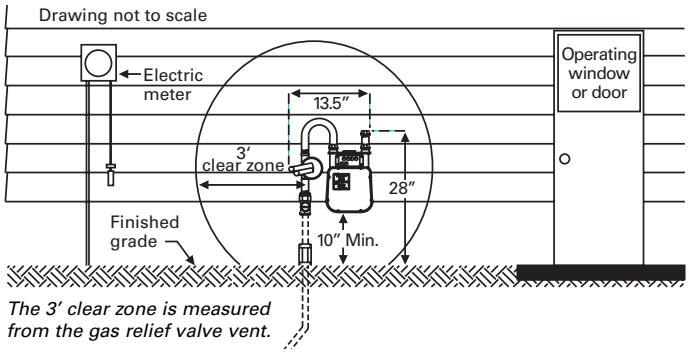

The 3′ clear zone is measured from the gas relief valve vent.

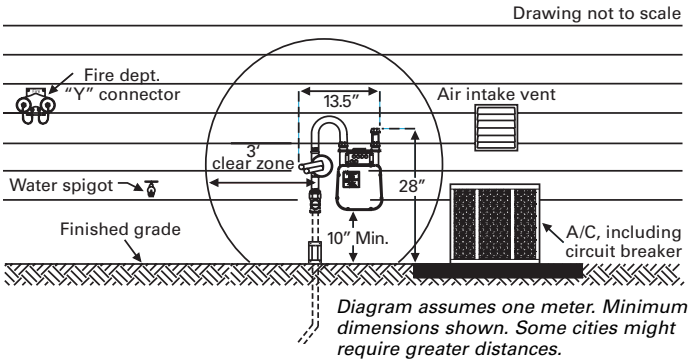

Diagram assumes one meter. Minimum dimensions shown. Some cities might require greater distances.

NATURAL GAS SERVICE LINE REQUIREMENTS

- Minimum of 3' from property line (unless easement exists)
- 6' from building structure, if line will be parallel to it
- Approximately 8' from buried fuel tanks (varies by municipality)
- 10' from wells and septic tanks
- Installed in a straight line perpendicular to main when possible
- Conduit crossings must be installed prior to service line installation (if applicable)

INSTALLATION SITE-READY CHECKLIST

○ Site must be within 6" of final grade
○ Basement/foundation in and backfilled
○ Clear 8' wide path from the gas main to service entrance
○ All exterior walls must be framed before meter can be installed
○ Request 7" wc or 2 psi delivery pressure
○ Clearly mark/stake the location of all private underground facilities* located on your property such as:

- Sewer lines
- Invisible fences
- Electric lines
- Water wells
- Septic systems
- Underground sprinkler systems
- Sump pump extensions
- Drain fields
- Buried fuel lines

** CenterPoint Energy and our representatives are not responsible for damage to these items if they are not clearly marked at the time of installation.*

OUT-OF-SEASON CONSTRUCTION CHARGES APPLY for installations from November 1 through March 31.

Frost burner	$170 per frost burner per day Two burners typically needed for two days. Additional usage may be needed per site conditions.
Mains	$2 per foot
Residential services	$4 per foot
Commercial services	$8 per foot

TO AVOID OUT-OF-SEASON CHARGES:

- Submit application by October 15.
- Meet site-ready requirements by November 1, including having paid any necessary main deposits.

Note: After November 1, installations requiring a road crossing may be unavailable due to municipality restrictions or weather conditions.

FOR MORE INFORMATION:

Builders Hotline: 612-342-5123 or 1-800-342-4166
CenterPointEnergy.com

Fax: 612-321-5573 or 1-800-365-9188